SECTION HA

HEATER & AIR CONDITIONING SYSTEM

CONTENTS

BASIC INSPECTION 3

DIAGNOSIS AND REPAIR WORK FLOW 3
Work Flow 3

FUNCTION DIAGNOSIS 5

REFRIGERATION SYSTEM 5
System Diagram 5
System Description 5
Component Parts Location 6
Component Description 7

SYMPTOM DIAGNOSIS 8

REFRIGERATION SYSTEM SYMPTOMS 8
Trouble Diagnosis For Unusual Pressure 8
Symptom Table 8

COMPRESSOR SYSTEM SYMPTOMS 11
Symptom Table 11

PRECAUTION 12

PRECAUTIONS 12
Precaution for Supplemental Restraint System (SRS) "AIR BAG" and "SEAT BELT PRE-TENSIONER" 12
Precaution Necessary for Steering Wheel Rotation after Battery Disconnect 12
Precaution for Procedure without Cowl Top Cover...13
Precautions For Xenon Headlamp Service 13
Working with HFC-134a (R-134a) 13
General Refrigerant Precaution 13
Refrigerant Connection 14
Service Equipment 16

COMPRESSOR 19
General Precautions 19

FLUORESCENT LEAK DETECTOR 20
General Precautions 20

PREPARATION 21

PREPARATION 21
Special Service Tool 21
Sealant or/and Lubricant 23

ON-VEHICLE MAINTENANCE 24

REFRIGERANT 24
Collection and Charge 24

LUBRICANT 28
Maintenance of Lubricant Quantity 28
Lubricant Adjusting Procedure for Components Replacement Except Compressor 28
Lubricant Adjusting Procedure for Compressor Replacement 29

REFRIGERATION SYSTEM 30
Inspection 30
Performance Chart 30
Refrigerant Leakages 31

FLUORESCENT LEAK DETECTOR 32
Inspection 32

ELECTRICAL LEAK DETECTOR 33
Inspection 33

ON-VEHICLE REPAIR 36

COMPRESSOR 36
Exploded View 36
Removal and Installation 36
Inspection 37

LOW-PRESSURE FLEXIBLE HOSE 38
Exploded View 38
Removal and Installation 38

HIGH-PRESSURE FLEXIBLE HOSE 40
Exploded View 40
Removal and Installation 40

LOW-PRESSURE PIPE **42**
Exploded View 42
Removal and Installation 42

HIGH-PRESSURE PIPE **44**
Exploded View 44
Removal and Installation 44

CONDENSER **46**
Exploded View 46
Removal and Installation 46

CONDENSER PIPE ASSEMBLY **48**
Exploded View 48
Removal and Installation 48

LIQUID TANK **50**
Exploded View 50
Removal and Installation 50

REFRIGERANT PRESSURE SENSOR **51**
Exploded View 51
Removal and Installation 51

EVAPORATOR **52**
Exploded View 52
Removal and Installation 53

EVAPORATOR PIPE ASSEMBLY **54**
Exploded View 54
Removal and Installation 55

EXPANSION VALVE **57**
Exploded View 57
Removal and Installation 58

SERVICE DATA AND SPECIFICATIONS (SDS) **59**

SERVICE DATA AND SPECIFICATIONS (SDS) **59**
Compressor 59
Lubricant 59
Refrigerant 59
Engine Idling Speed 59
Belt Tension 59

BASIC INSPECTION

DIAGNOSIS AND REPAIR WORK FLOW

Work Flow

INFOID:0000000003795801

OVERALL SEQUENCE

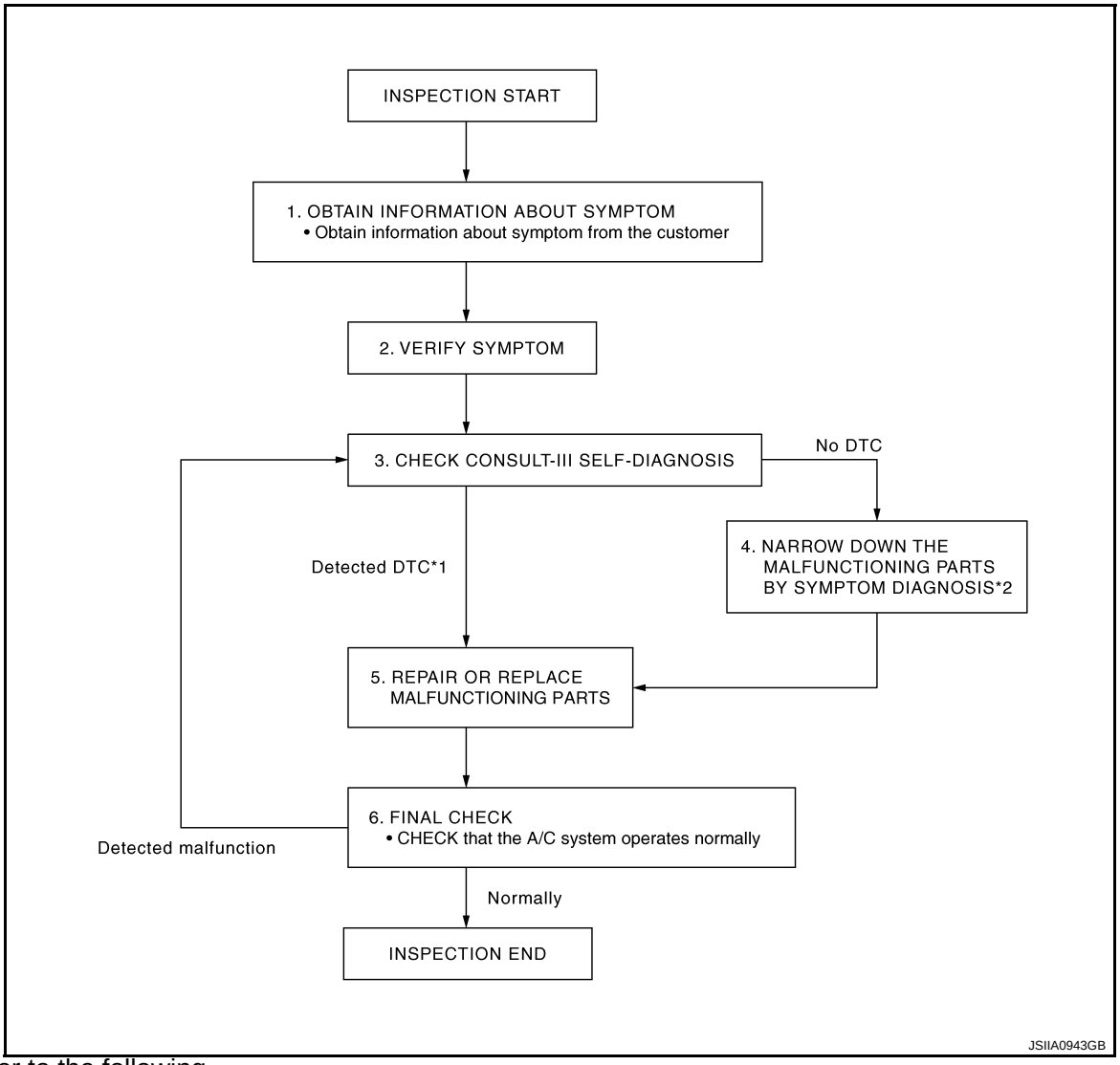

*1: Refer to the following.
- HAC-85, "DTC Index" (WITHOUT 7 INCH DISPLAY)
- HAC-212, "WITHOUT INTELLIGENT AIR CONDITIONER SYSTEM : DTC Index" [WITH 7 INCH DISPLAY (WITHOUT INTELLIGENT AIR CONDITIONER SYSTEM)]
- HAC-224, "WITH INTELLIGENT AIR CONDITIONER SYSTEM : DTC Index" [WITH 7 INCH DISPLAY (WITH INTELLIGENT AIR CONDITIONER SYSTEM)]

*2: Refer to the following.
- HAC-87, "Diagnosis Chart By Symptom" (WITHOUT 7 INCH DISPLAY)
- HAC-226, "Diagnosis Chart By Symptom" (WITH 7 INCH DISPLAY)

DETAILED FLOW

1.OBTAIN INFORMATION ABOUT SYMPTOM

Interview the customer to obtain as much information as possible about the conditions and environment under which the malfunction occurred.

>> GO TO 2.

2. VERIFY SYMPTOM

Verify the symptom with operational check based on the information obtained from the customer. Refer to the following.

- HAC-8, "Description & Inspection" (WITHOUT 7 INCH DISPLAY)
- HAC-108, "WITHOUT INTELLIGENT AIR CONDITIONER SYSTEM : Description & Inspection" [WITH 7 INCH DISPLAY (WITHOUT INTELLIGENT AIR CONDITIONER SYSTEM)]
- HAC-112, "WITH INTELLIGENT AIR CONDITIONER SYSTEM : Description & Inspection" [WITH 7 INCH DISPLAY (WITH INTELLIGENT AIR CONDITIONER SYSTEM)]

>> GO TO 3.

3. CHECK WITH SELF-DIAGNOSIS FUNCTION OF CONSULT-III

Using CONSULT-III, perform “SELF-DIAGNOSIS RESULTS” of HVAC. Refer to the following.

- HAC-85, "DTC Index" (WITHOUT 7 INCH DISPLAY)
- HAC-212, "WITHOUT INTELLIGENT AIR CONDITIONER SYSTEM : DTC Index" [WITH 7 INCH DISPLAY (WITHOUT INTELLIGENT AIR CONDITIONER SYSTEM)]
- HAC-224, "WITH INTELLIGENT AIR CONDITIONER SYSTEM : DTC Index" [WITH 7 INCH DISPLAY (WITH INTELLIGENT AIR CONDITIONER SYSTEM)]

Are self-diagnosis results normal?

YES >> GO TO 4.
NO >> GO TO 5.

4. NARROW DOWN THE MALFUNCTIONING PARTS BY SYMPTOM DIAGNOSIS

Perform symptom diagnosis and narrow down the malfunctioning parts. Refer to the following.

- HAC-87, "Diagnosis Chart By Symptom" (WITHOUT 7 INCH DISPLAY)
- HAC-226, "Diagnosis Chart By Symptom" (WITH 7 INCH DISPLAY)

>> GO TO 5.

5. REPAIR OR REPLACE

Repair or replace malfunctioning parts.

NOTE:

If DTC is displayed, erase DTC after repairing or replacing malfunctioning parts.

>> GO TO 6.

6. FINAL CHECK

Check that the A/C system operates normally.

Is the inspection result normal?

YES >> INSPECTION END
NO >> GO TO 3.

FUNCTION DIAGNOSIS

REFRIGERATION SYSTEM

System Diagram

INFOID:0000000003795802

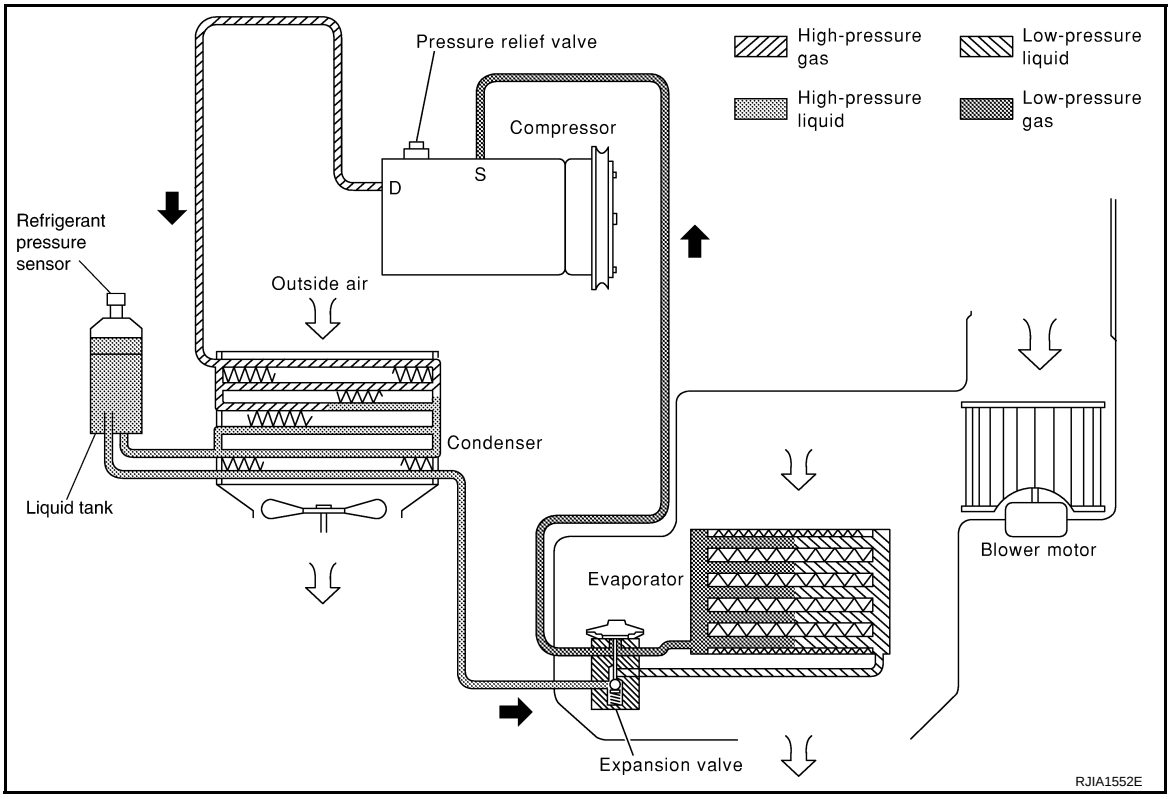

System Description

INFOID:0000000003795803

REFRIGERANT CYCLE

Refrigerant Flow

The refrigerant flows from the compressor, through the condenser with a liquid tank, through the evaporator, and then back to the compressor. The refrigerant evaporation in the evaporator is controlled by an externally equalized expansion valve, located at dash panels.

Freeze Protection

To prevent the evaporator from freezing up, the evaporator air temperature is monitored, and the voltage signal to the A/C auto amp. turns the A/C relay OFF and stops the compressor.

REFRIGERANT SYSTEM PROTECTION

Refrigerant Pressure Sensor

The refrigerant system is protected against excessively high or low-pressures by the refrigerant pressure sensor, located on the liquid tank. The refrigerant pressure sensor detects the pressure inside the refrigerant line and sends the voltage signal to the ECM if the system pressure rises above, or falls below the specifications. ECM turns the A/C relay OFF and stops the compressor when pressure on the high-pressure side detected by the refrigerant pressure sensor is over approximately 3,119 kPa (31.19 bar, 31.8 kg/cm^2, 452 psi) or below approximately 118 kPa (1.18 bar, 1.2 kg/cm^2, 17 psi).

Pressure Relief Valve

The refrigerant system is also protected by a pressure relief valve, located in the rear head of the compressor. The release port on the pressure relief valve automatically opens and releases refrigerant into the atmosphere when the pressure of the refrigerant in the system increases to an unusual level [more than 3,600 kPa (36.0 bar, 36.7 kg/cm^2, 522 psi)].

Component Parts Location

INFOID:0000000003795804

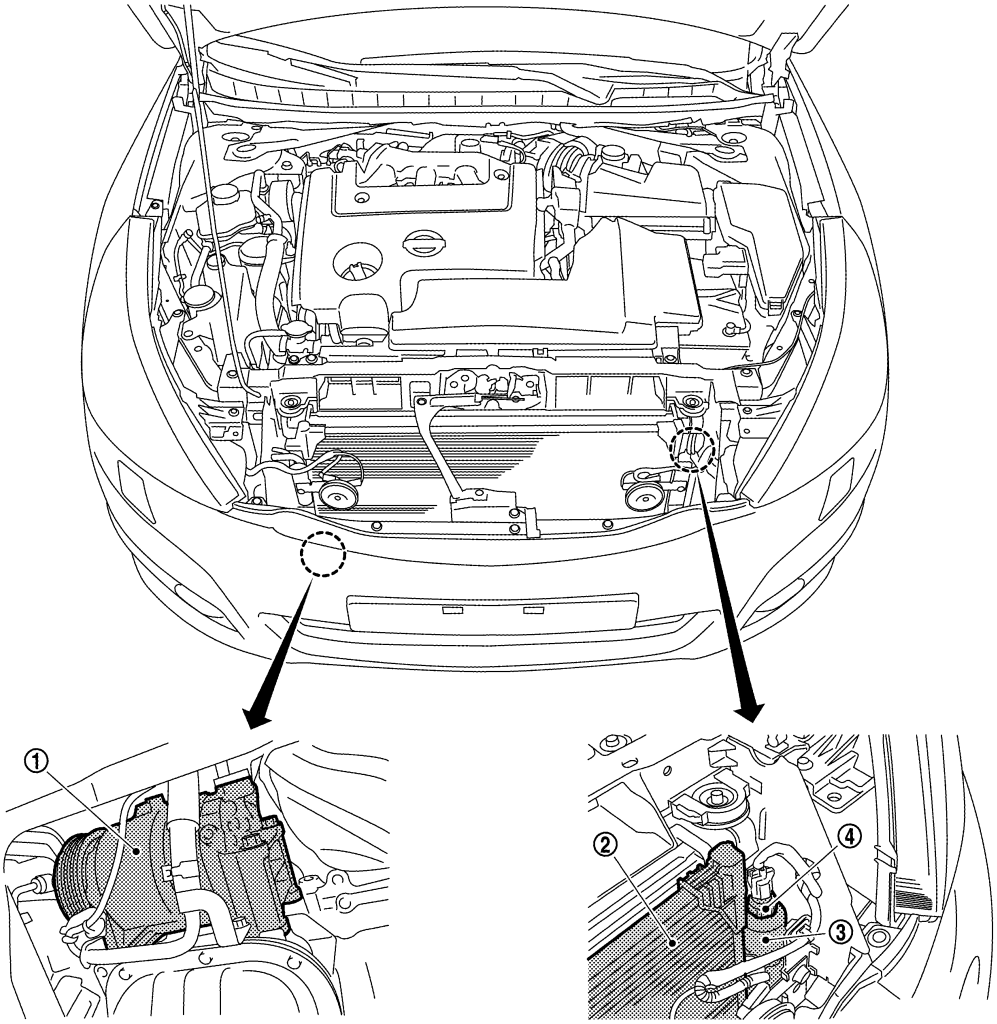

JPIIA0990ZZ

1. Compressor
2. Condenser
3. Liquid tank
4. Refrigerant pressure sensor

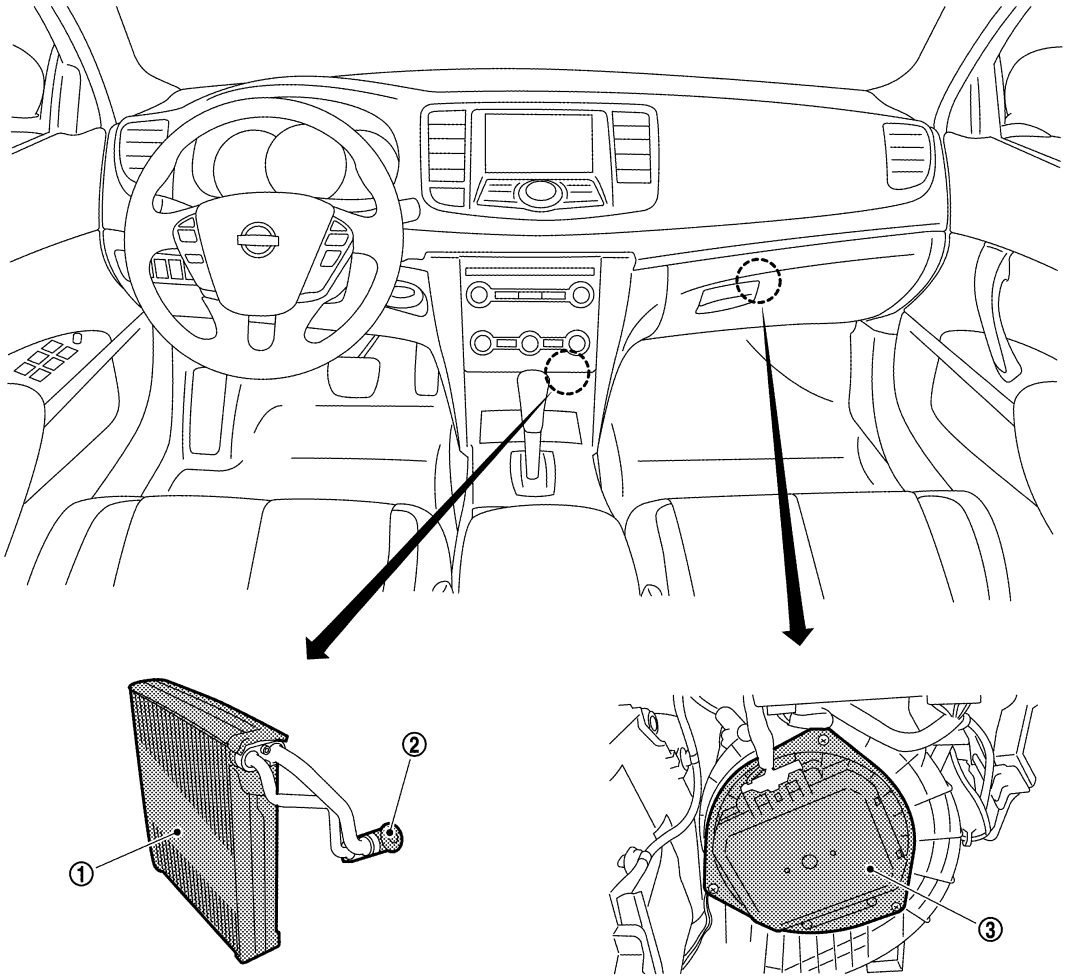

JPIIA0991ZZ

1. Evaporator
2. Expansion valve
3. Blower motor

Component Description

INFOID:0000000003795805

Component	Description
Compressor	Intakes, compresses, and discharges refrigerant, to circulate refrigerant inside the refrigerant cycle.
Condenser	Cools refrigerant discharged from compressor, and transforms it to liquid refrigerant.
Liquid tank	Eliminates foreign material in refrigerant, and temporarily stores liquid refrigerant.
Refrigerant pressure sensor	Refer to EC-348, "Description".
Evaporator	The mist form liquid refrigerant transforms to gas through evaporation by the air conveyed from the blower motor. The air is cooled by the heat from evaporation.
Expansion valve	Transforms high-pressure liquid refrigerant to mist form from low-pressure liquid refrigerant by the drawing function.
Blower motor	Takes in air from the vehicle or fresh outside air, provides it forcedly pushes it into to the air conditioner, and circulates it inside the vehicle.

SYMPTOM DIAGNOSIS

REFRIGERATION SYSTEM SYMPTOMS

Trouble Diagnosis For Unusual Pressure

INFOID:0000000003795806

Diagnose using a manifold gauge whenever the system's high and/or low side pressure(s) is/are unusual. The marker above the gauge scale in the following tables indicates the standard pressure range. Refer to the above table (Ambient air temperature-to-operating pressure table) since the standard pressure, however, differs from vehicle to vehicle.

Symptom Table

INFOID:0000000003795807

Gauge indication	Refrigerant cycle	Probable cause	Corrective action
Both high and low-pressure sides are too high. 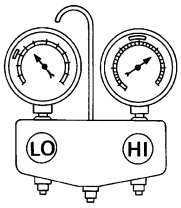 AC359A	The pressure returns to normal and is reduced soon after water is splashed on condenser.	Excessive refrigerant charge in refrigeration cycle.	Reduce refrigerant until specified pressure is obtained.
	Air suction by cooling fan is insufficient.	Insufficient condenser cooling performance. ↓ 1. Condenser fins are clogged. 2. Improper fan rotation of cooling fan.	• Clean condenser. • Check and repair cooling fan if necessary.
	• Low-pressure pipe is not cold. • When the compressor is stopped the high-pressure reading quickly drops by approximately 196 kPa (1.96 bar, 2 kg/cm^2, 28 psi). It then decreases gradually thereafter.	Poor heat exchange in condenser (After compressor operation stops, high-pressure decreases too slowly). ↓ Air in refrigeration cycle.	Evacuate repeatedly and recharge system.
	Engine tends to overheat.	Engine cooling systems malfunction.	Check and repair each engine cooling system.
	• An area of the low-pressure pipe is colder than areas near the evaporator outlet. • Low-pressure pipe is sometimes covered with frost.	• Excessive liquid refrigerant on low-pressure side. • Excessive refrigerant discharge flow. • Expansion valve is slightly open compared with the specification. ↓ Improper expansion valve adjustment.	Replace expansion valve.
High-pressure side is too high and low-pressure side is too low. 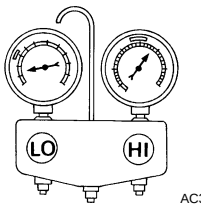 AC360A	Upper side of condenser and high-pressure side are hot, however, the liquid tank is not very hot.	High-pressure tube or parts located between compressor and condenser are clogged or crushed.	• Check and repair or replace malfunctioning parts. • Check lubricant for contamination.

Gauge indication	Refrigerant cycle	Probable cause	Corrective action
High-pressure side is too low and low-pressure side is too high. 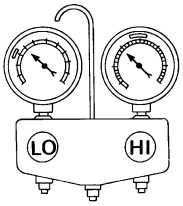 AC356A	High- and low-pressure sides become equal soon after compressor operation stops.	Compressor pressure operation is improper. ↓ Damaged inside compressor packings.	Replace compressor.
	No temperature difference between high- and low-pressure sides.	Compressor pressure operation is improper. ↓ Damaged inside compressor packings.	Replace compressor.
Both high and low-pressure sides are too low. 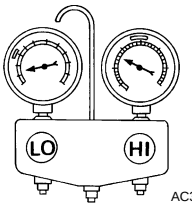 AC353A	• There is a big temperature difference between the liquid tank outlet and inlet. Outlet temperature is extremely low. • Liquid tank inlet and expansion valve are frosted.	Liquid tank inside is slightly clogged.	• Replace liquid tank. • Check lubricant for contamination.
	• Expansion valve inlet temperature is extremely low compared with areas near the liquid tank. • Expansion valve inlet is frosted. • Temperature difference occurs somewhere in high-pressure side.	High-pressure pipe located between liquid tank and expansion valve is clogged.	• Check and repair malfunctioning parts. • Check lubricant for contamination.
	Expansion valve and liquid tank are warm or slightly cool when touched.	Low refrigerant charge. ↓ Leaking fittings or components.	Check refrigerant for leakages. Refer to HA-31, "Refrigerant Leakages".
	There is a big temperature difference between the expansion valve inlet and outlet while the valve itself is frosted.	Expansion valve slightly closes compared with the specification. ↓ 1. Improper expansion valve adjustment. 2. Malfunctioning expansion valve. 3. Outlet and inlet may be clogged.	• Remove foreign materials by using compressed air. • Replace expansion valve. • Check lubricant for contamination.
	An area of the low-pressure pipe is colder than areas near the evaporator outlet.	Low-pressure pipe is clogged or crushed.	• Check and repair malfunctioning parts. • Check lubricant for contamination.
	Air flow volume is not sufficient or is too low.	Evaporator is frozen.	• Check intake sensor circuit. Refer to HAC-50, "Diagnosis Procedure"(WITHOUT 7 INCH DISPLAY) or HAC-172, "Diagnosis Procedure"(WITH 7 INCH DISPLAY). • Replace compressor. • Repair evaporator fins. • Replace evaporator. • Check blower motor circuit. Refer to HAC-68, "Diagnosis Procedure"(WITHOUT 7 INCH DISPLAY) or HAC-193, "Diagnosis Procedure"(WITH 7 INCH DISPLAY).

Gauge indication	Refrigerant cycle	Probable cause	Corrective action
Low-pressure side sometimes becomes negative. 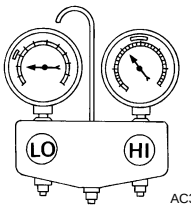 AC354A	• Air conditioning system does not function and does not cyclically cool the compartment air. • The system constantly functions for a period of time after compressor is stopped and restarted.	Refrigerant does not discharge cyclically. ↓ Moisture is frozen at expansion valve outlet and inlet. ↓ Water is mixed with refrigerant.	• Drain water from refrigerant or replace refrigerant. • Replace liquid tank.
Low-pressure side becomes negative. 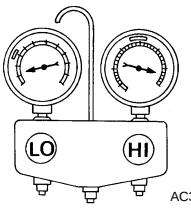 AC362A	Liquid tank or front/rear side of expansion valve's pipe is frosted or wet with dew.	High-pressure side is closed and refrigerant does not flow. ↓ Expansion valve or liquid tank is frosted.	Do not use the system until the frost has melted. Start it again to check whether or not the malfunction is caused by water or foreign materials. • Cooling is initially okay if water is the cause. Then the water freezes, which causes a blockage. Drain water from refrigerant or replace refrigerant. • If due to foreign materials, remove expansion valve and the particles with dry compressed air (not shop air.) • Replace expansion valve if either of the above methods cannot correct the malfunction. • Replace liquid tank. • Check lubricant for contamination.

COMPRESSOR SYSTEM SYMPTOMS

Symptom Table

INFOID:0000000003795808

Follow the next table and perform trouble diagnosis if there is a compressor unit malfunction (internal noise, insufficient cooling).

Symptom	Inspection method	Check list	Result	Action
Noise from compressor unit When A/C is ON. (rattling or rolling sound)	Cooker system internal pressure	Check with manifold gauge	Both high- and low-pressure sides are high.*2	Recharge with proper amount of refrigerant.
			High/low-pressures hunt.*2	Replace compressor only.
	Check compressor oil condition.	Sample compressor oil and judge.	Refer to the criteria shown in compressor lubricant.	Diagnostic result 1: Replace compressor only. Diagnostic result 2: Replace compressor and liquid tank.
Insufficient cooling*1	Compressor body	Check rotation of compressor. If sized or stuck, sample compressor oil and judge.		
	Cooler system internal pressure	Check with a manifold gauge. Sample compressor oil and judge if the difference between high-pressure and low-pressure is small or if they are almost the same.		
Outlet air temperature rises temporarily while driving.*2	—	—	—	Replace compressor only.

*1: First conduct inspection according to trouble diagnosis for each malfunction. Refer to HAC-88, "Inspection procedure".
*2: Applicable to variable capacity compressor only.

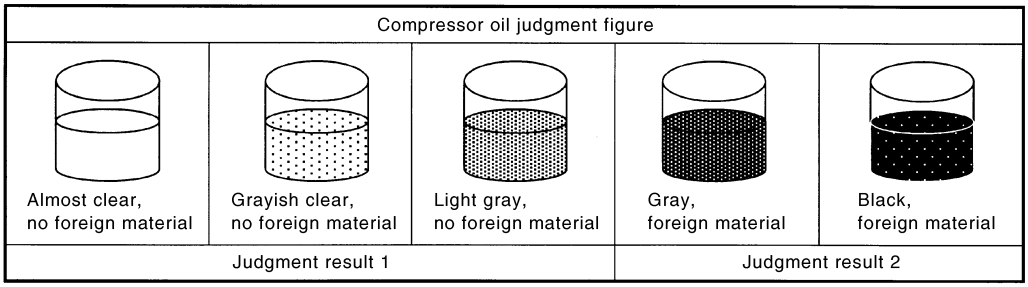

JSIIA0927GB

PRECAUTION

PRECAUTIONS

Precaution for Supplemental Restraint System (SRS) "AIR BAG" and "SEAT BELT PRE-TENSIONER"

INFOID:0000000003844112

The Supplemental Restraint System such as “AIR BAG” and “SEAT BELT PRE-TENSIONER”, used along with a front seat belt, helps to reduce the risk or severity of injury to the driver and front passenger for certain types of collision. Information necessary to service the system safely is included in the “SRS AIRBAG” and “SEAT BELT” of this Service Manual.

WARNING:

- **To avoid rendering the SRS inoperative, which could increase the risk of personal injury or death in the event of a collision which would result in air bag inflation, all maintenance must be performed by an authorized NISSAN/INFINITI dealer.**
- **Improper maintenance, including incorrect removal and installation of the SRS, can lead to personal injury caused by unintentional activation of the system. For removal of Spiral Cable and Air Bag Module, see the “SRS AIRBAG”.**
- **Never use electrical test equipment on any circuit related to the SRS unless instructed to in this Service Manual. SRS wiring harnesses can be identified by yellow and/or orange harnesses or harness connectors.**

Precaution Necessary for Steering Wheel Rotation after Battery Disconnect

INFOID:0000000003844113

NOTE:

- Before removing and installing any control units, first turn the push-button ignition switch to the LOCK position, then disconnect both battery cables.
- After finishing work, confirm that all control unit connectors are connected properly, then re-connect both battery cables.
- Always use CONSULT-III to perform self-diagnosis as a part of each function inspection after finishing work. If a DTC is detected, perform trouble diagnosis according to self-diagnosis results.

This vehicle is equipped with a push-button ignition switch and a steering lock unit.
If the battery is disconnected or discharged, the steering wheel will lock and cannot be turned.
If turning the steering wheel is required with the battery disconnected or discharged, follow the procedure below before starting the repair operation.

OPERATION PROCEDURE

1. Connect both battery cables.
   NOTE:
   Supply power using jumper cables if battery is discharged.
2. Turn the push-button ignition switch to ACC position.
   (At this time, the steering lock will be released.)
3. Disconnect both battery cables. The steering lock will remain released with both battery cables disconnected and the steering wheel can be turned.
4. Perform the necessary repair operation.
5. When the repair work is completed, re-connect both battery cables. With the brake pedal released, turn the push-button ignition switch from ACC position to ON position, then to LOCK position. (The steering wheel will lock when the push-button ignition switch is turned to LOCK position.)
6. Perform self-diagnosis check of all control units using CONSULT-III.

Precaution for Procedure without Cowl Top Cover

INFOID:0000000003795884

When performing the procedure after removing cowl top cover, cover the lower end of windshield with urethane, etc.

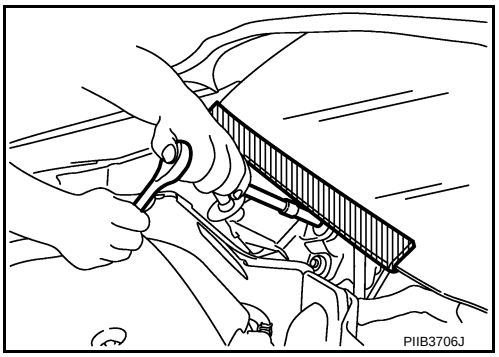

Precautions For Xenon Headlamp Service

INFOID:0000000003795886

WARNING:

Comply with the following warnings to prevent any serious accident.

- **Disconnect the battery cable (negative terminal) or the power supply fuse before installing, removing, or touching the xenon headlamp (bulb included). The xenon headlamp contains high-voltage generated parts.**
- **Never work with wet hands.**
- **Check the xenon headlamp ON-OFF status after assembling it to the vehicle. Never turn the xenon headlamp ON in other conditions. Connect the power supply to the vehicle-side connector. (Turning it ON outside the lamp case may cause fire or visual impairments.)**
- **Never touch the bulb glass immediately after turning it OFF. It is extremely hot.**

CAUTION:

Comply with the following cautions to prevent any error and malfunction.

- **Install the xenon bulb securely. (Insufficient bulb socket installation may melt the bulb, the connector, the housing, etc. by high-voltage leakage or corona discharge.)**
- **Never perform HID circuit inspection with a tester.**
- **Never touch the xenon bulb glass with hands. Never put oil and grease on it.**
- **Dispose of the used xenon bulb after packing it in thick vinyl without breaking it.**
- **Never wipe out dirt and contamination with organic solvent (thinner, gasoline, etc.).**

Working with HFC-134a (R-134a)

INFOID:0000000003795887

CAUTION:

- **CFC-12 (R-12) refrigerant and HFC-134a (R-134a) refrigerant are not compatible. These refrigerants must never be mixed, even in the smallest amounts. Compressor malfunction is likely occur if the refrigerants are mixed.**
- **Use only specified lubricant for the HFC-134a (R-134a) A/C system and HFC-134a (R-134a) components. Compressor malfunction is likely to occur if lubricant other than that specified is used.**
- **The specified HFC-134a (R-134a) lubricant rapidly absorbs moisture from the atmosphere. The following handling precautions must be observed:**
- **Cap (seal) immediately the component to minimize the entry of moisture from the atmosphere when removing refrigerant components from a vehicle.**
- **Never remove the caps (unseal) until just before connecting the components when installing refrigerant components to a vehicle. Connect all refrigerant loop components as quickly as possible to minimize the entry of moisture into system.**
- **Use only the specified lubricant from a sealed container. Reseal immediately containers of lubricant. Lubricant becomes moisture saturated and should not be used without proper sealing.**
- **Never allow lubricant (NISSAN A/C System Oil Type S) to come in contact with styrene foam parts. Damage may result.**

General Refrigerant Precaution

INFOID:0000000003795888

WARNING:

- **Never breath A/C refrigerant and lubricant vapor or mist. Exposure may irritate eyes, nose and throat. Use only approved recovery/recycling equipment to discharge HFC-134a (R-134a) refrigerant.**

Ventilate work area before resuming service if accidental system discharge occurs. Additional health and safety information may be obtained from refrigerant and lubricant manufacturers.

- **Never release refrigerant into the air. Use approved recovery/recycling equipment to capture the refrigerant each time an air conditioning system is discharged.**
- **Wear always eye and hand protection (goggles and gloves) when working with any refrigerant or air conditioning system.**
- **Never store or heat refrigerant containers above 52°C (126°F).**
- **Never heat a refrigerant container with an open flame; Place the bottom of the container in a warm pail of water if container warming is required.**
- **Never intentionally drop, puncture, or incinerate refrigerant containers.**
- **Keep refrigerant away from open flames: poisonous gas is produced if refrigerant burns.**
- **Refrigerant displaces oxygen, therefore be certain to work in well ventilated areas to prevent suffocation.**
- **Never pressure test or leakage test HFC-134a (R-134a) service equipment and/or vehicle air conditioning systems with compressed air during repair. Some mixtures of air and HFC-134a (R-134a) have been shown to be combustible at elevated pressures. These mixtures, if ignited, may cause injury or property damage. Additional health and safety information may be obtained from refrigerant manufacturers.**

Refrigerant Connection

INFOID:0000000003799207

A new type refrigerant connection has been introduced to all refrigerant lines except the following locations.

- Expansion valve to evaporator
- Refrigerant pressure sensor to liquid tank

O-RING AND REFRIGERANT CONNECTION

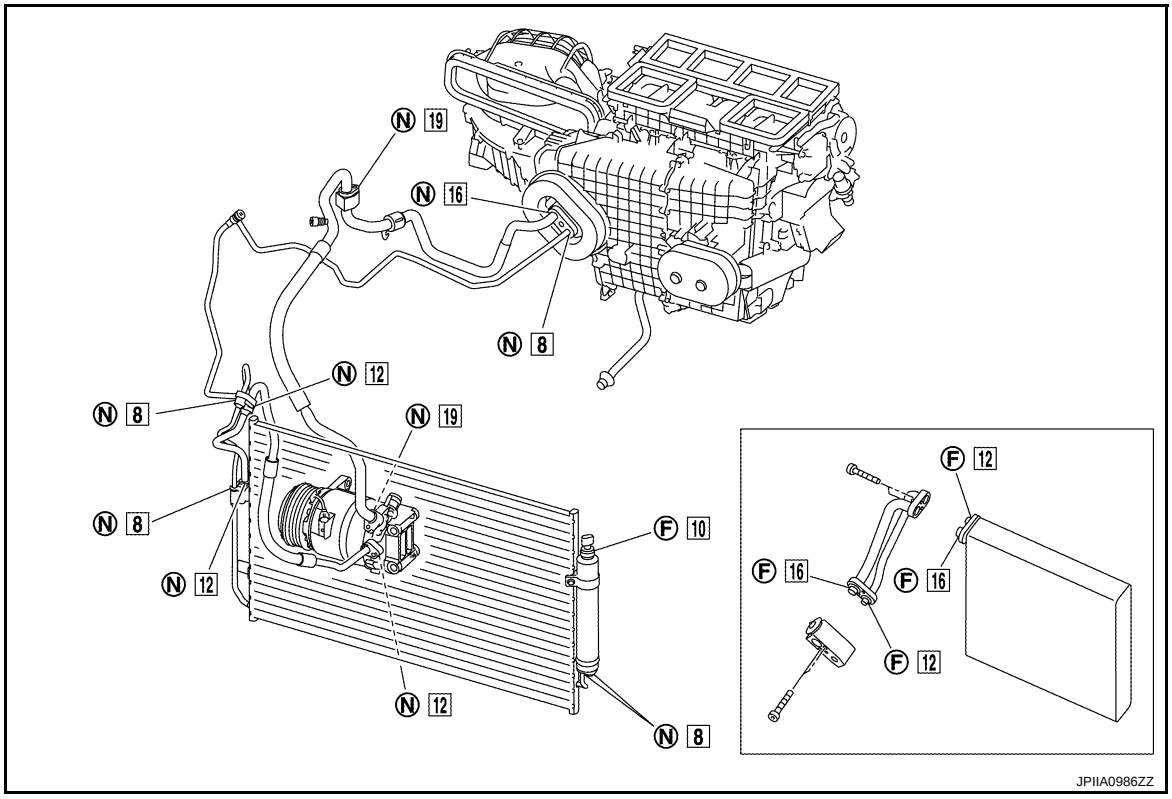

F. Former type refrigerant connection N. New type refrigerant connection

□: O-ring size

CAUTION:

The new and former refrigerant connections use different O-ring configurations. Never confuse O-rings since they are not interchangeable. Refrigerant may leak at the connection if a wrong O-ring is installed.

O-Ring Part Numbers and Specifications

Connection type	Piping connection point		Part number	QTY	O-ring size
New	Low-pressure flexible hose to low-pressure pipe		92474 N8210	1	19
	High-pressure pipe to condenser pipe assembly (Outlet)		92471 N8210	1	8
	Condenser pipe assembly (Inlet) to high-pressure flexible hose		92472 N8210	1	12
	Condenser assembly to condenser pipe assembly	Inlet	92472 N8210	1	12
		Outlet	92471 N8210	1	8
	Low-pressure pipe to expansion valve		92473 N8210	1	16
	High-pressure pipe to expansion valve		92471 N8210	1	8
	Compressor to low-pressure flexible hose		92474 N8210	1	19
	Compressor to high-pressure flexible hose		92472 N8210	1	12
	Liquid tank to condenser assembly	Inlet	92471 N8210	1	8
		Outlet		1	
Former	Refrigerant pressure sensor to liquid tank		J2476 89956	1	10
	Expansion valve to evaporator pipe assembly	Inlet	92475 71L00	1	12
		Outlet	92475 72L00	1	16
	Evaporator to evaporator pipe assembly	Inlet	92475 71L00	1	12
		Outlet	92475 72L00	1	16

WARNING:

Check that all refrigerant is discharged into the recycling equipment and the pressure in the system is less than atmospheric pressure. Then gradually loosen the discharge side hose fitting and remove it.

CAUTION:

Observe the following when replacing or cleaning refrigerant cycle components.

- **Store it in the same way at it is when mounted on the car when the compressor is removed. Failure to do so causes lubricant to enter the low-pressure chamber.**
- **Use always a torque wrench and a back-up wrench when connecting tubes.**
- **Plug immediately all openings to prevent entry of dust and moisture after disconnecting tubes.**
- **Connect the pipes at the final stage of the operation when installing an air conditioner in the vehicle. Never remove the seal caps of pipes and other components until just before required for connection.**
- **Allow components stored in cool areas to warm to working area temperature before removing seal caps. This prevents condensation from forming inside A/C components.**
- **Remove thoroughly moisture from the refrigeration system before charging the refrigerant.**
- **Replace always used O-rings.**
- **Apply lubricant to circle of the O-rings shown in illustration when connecting tube. Be careful not to apply lubricant to threaded portion.**

Name : NISSAN A/C System Oil Type S

- **O-ring must be closely attached to the groove portion of tube.**
- **Be careful not to damage O-ring and tube when replacing the O-ring.**
- **Connect tube until a click can be heard. Then tighten the nut or bolt by hand. Check that the O-ring is installed to tube correctly.**

- **Perform leakage test and make sure that there is no leakage from connections after connecting line. Disconnect that line and replace the O-ring when the refrigerant leaking point is found. Then tighten connections of seal seat to the specified torque.**

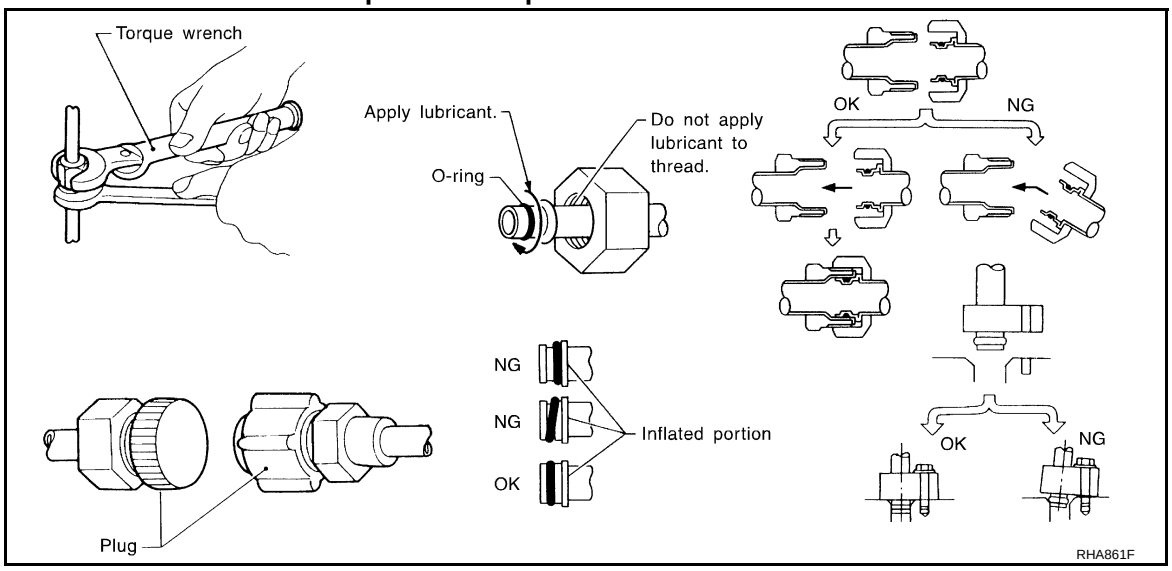

Service Equipment

INFOID:0000000003795889

RECOVERY/RECYCLING EQUIPMENT

Be certain to follow the manufacturer's instructions for machine operation and machine maintenance. Never introduce any refrigerant other than that specified into the machine.

ELECTRICAL LEAK DETECTOR

Be certain to follow the manufacturer's instructions for tester operation and tester maintenance.

VACUUM PUMP

The lubricant contained inside the vacuum pump is not compatible with the specified lubricant for HFC-134a (R-134a) A/C systems. The vent side of the vacuum pump is exposed to atmospheric pressure. So the vacuum pump lubricant may migrate out of the pump into the service hose. This is possible when the pump is switched OFF after evacuation (vacuuming) and hose is connected to it.
To prevent this migration, use a manual valve placed near the hose-to-pump connection, as per the following.

- Vacuum pumps usually have a manual isolator valve as part of the pump. Close this valve to isolate the service hose from the pump.
- Use a hose equipped with a manual shut-off valve near the pump end for pumps without an isolator. Close the valve to isolate the hose from the pump.
- Disconnect the hose from the pump if the hose has an automatic shut-off valve. As long as the hose is connected, the valve is open and lubricating oil may migrate.

Some one-way valves open when vacuum is applied and close under no vacuum condition. Such valves may restrict the pump's ability to pull a deep vacuum and are not recommended.

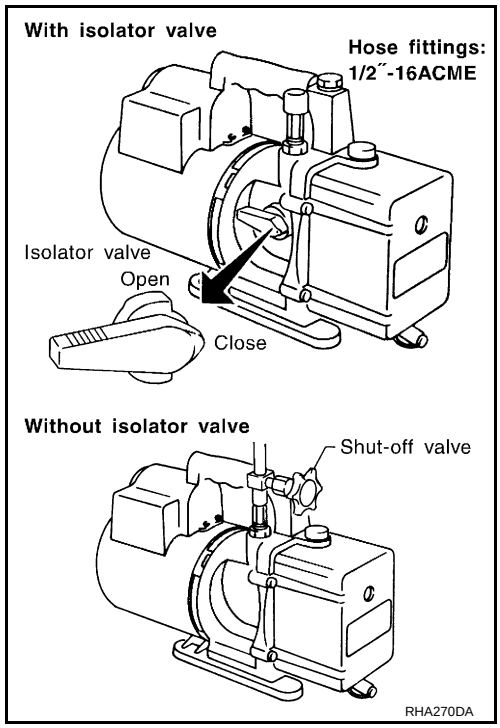

MANIFOLD GAUGE SET

Be certain that the gauge face indicates HFC-134a or R-134a. Be sure the gauge set has 1/2″-16 ACME threaded connections for service hoses. Confirm the set has been used only with refrigerant HFC-134a (R-134a) and specified lubricants.

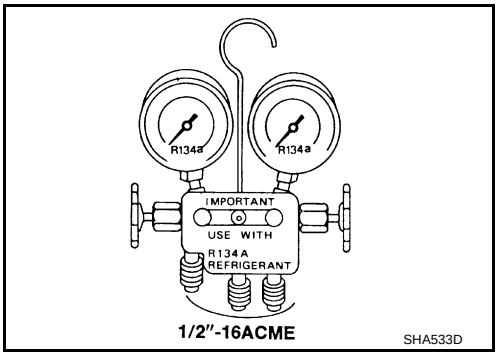

SERVICE HOSES

Be certain that the service hoses display the markings described (colored hose with black stripe). All hoses must equip positive shut-off devices (either manual or automatic) near the end of the hoses opposite to the manifold gauge.

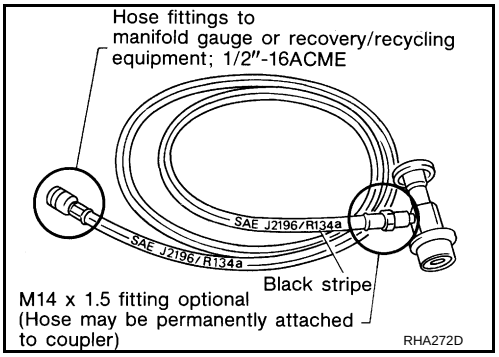

SERVICE COUPLERS

Never attempt to connect HFC-134a (R-134a) service couplers to a CFC-12 (R-12) A/C system. The HFC-134a (R-134a) couplers do not properly connect to the CFC-12 (R-12) system. However, if an improper connection is attempted, discharging and contamination may occur.

Shut-off valve rotation	A/C service valve
Clockwise	Open
Counterclockwise	Close

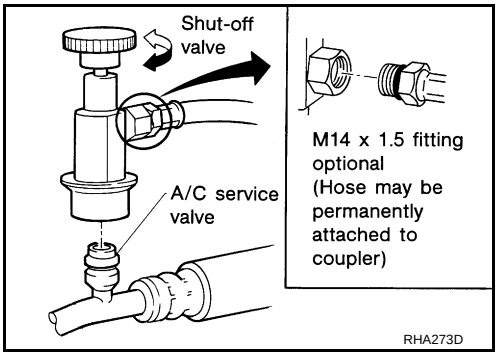

REFRIGERANT WEIGHT SCALE

Verify that no refrigerant other than HFC-134a (R-134a) and specified lubricants have been used with the scale. The hose fitting must be 1/2″-16 ACME if the scale controls refrigerant flow electronically.

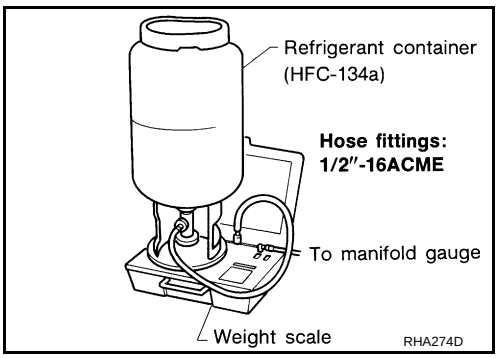

CALIBRATING ACR4 WEIGHT SCALE

Calibrate the scale each three month.
To calibrate the weight scale on the ACR4:

1. Press **“Shift/Reset”** and **“Enter”** at the same time.
2. Press **“8787”**. **“A1”** is displayed.
3. Remove all weight from the scale.
4. Press **“0”**, then press **“Enter”**. **“0.00”** is displayed and change to **“A2”**.

< PRECAUTION >

5. Place a known weight (dumbbell or similar weight), between 4.5 and 8.6 kg (10 and 19 lb.) on the center of the weight scale.
6. Enter the known weight using four digits. (Example 10 lb. = 10.00, 10.5 lb. = 10.50)
7. Press **"Enter"**— the display returns to the vacuum mode.
8. Press **"Shift/Reset"** and **"Enter"** at the same time.
9. Press **"6"**— the known weight on the scale is displayed.
10. Remove the known weight from the scale. **"0.00"** is displayed.
11. Press **"Shift/Reset"** to return the ACR4 to the program mode.

CHARGING CYLINDER

Using a charging cylinder is not recommended. Refrigerant may be vented into air from cylinder's top valve when filling the cylinder with refrigerant. Also, the accuracy of the cylinder is generally less than that of an electronic scale or of quality recycle/recharge equipment.

COMPRESSOR

General Precautions

INFOID:0000000003795891

CAUTION:

- **Plug all openings to prevent moisture and foreign matter from entering.**
- **Store it in the same way at it is when mounted on the car when the compressor is removed.**
- **Follow “Maintenance of Lubricant Quantity in Compressor” exactly when replacing or repairing compressor. Refer to HA-28, "Maintenance of Lubricant Quantity".**
- **Keep friction surfaces between clutch and pulley clean. Wipe it off by using a clean waste cloth moistened with thinner if the surface is contaminated with lubricant.**
- **Turn the compressor shaft by hand more than five turns in both directions after compressor service operation. This distributes equally lubricant inside the compressor. Let the engine idle and operate the compressor for one hour after the compressor is installed.**
- **Apply voltage to the new one and check for normal operation after replacing the compressor magnet clutch.**

FLUORESCENT LEAK DETECTOR

General Precautions

INFOID:0000000003795892

CAUTION:

- **The A/C system contains a fluorescent leak detection dye used for locating refrigerant leakages. An ultraviolet (UV) lamp is required to illuminate the dye when inspecting for leakages.**
- **Wear always fluorescence enhancing UV safety goggles to protect eyes and enhance the visibility of the fluorescent dye.**
- **The fluorescent dye leak detector is not a replacement for an electrical leak detector (SST). The fluorescent dye leak detector should be used in conjunction with an electrical leak detector (SST) to pinpoint refrigerant leakages.**
- **Read and follow all manufacture's operating instructions and precautions prior to performing the work for the purpose of safety and customer's satisfaction.**
- **A compressor shaft seal should not necessarily be repaired because of dye seepage. The compressor shaft seal should only be repaired after confirming the leakage with an electrical leak detector (SST).**
- **Remove always any remaining dye from the leakage area after repairs are completed to avoid a misdiagnosis during a future service.**
- **Never allow dye to come into contact with painted body panels or interior components. Clean immediately with the approved dye cleaner if dye is spilled. Fluorescent dye left on a surface for an extended period of time cannot be removed.**
- **Never spray the fluorescent dye cleaning agent on hot surfaces (engine exhaust manifold, etc.).**
- **Never use more than one refrigerant dye bottle (1/4 ounce /7.4 cc) per A/C system.**
- **Leak detection dyes for HFC-134a (R-134a) and CFC-12 (R-12) A/C systems are different. Never use HFC-134a (R-134a) leak detection dye in CFC-12 (R-12) A/C system, or CFC-12 (R-12) leak detection dye in HFC-134a (R-134a) A/C system, or A/C system damage may result.**
- **The fluorescent properties of the dye remains for three or more years unless a compressor malfunction occurs.**

IDENTIFICATION

NOTE:

Vehicles with factory installed fluorescent dye have a green label.
Vehicles without factory installed fluorescent dye have a blue label.

IDENTIFICATION LABEL FOR VEHICLE

Vehicles with factory installed fluorescent dye have the identification label on the front side of hood.

PREPARATION

PREPARATION

Special Service Tool

INFOID:0000000003795893

HFC-134a (R-134a) Service Tool and Equipment

- Never mix HFC-134a (R-134a) refrigerant and/or its specified lubricant with CFC-12 (R-12) refrigerant and/or its lubricant.
- Separate and non-interchangeable service equipment must be used for handling each type of refrigerant/lubricant.
- Refrigerant container fittings, service hose fittings and service equipment fittings (equipment which handles refrigerant and/or lubricant) are different between CFC-12 (R-12) and HFC-134a (R-134a). This is to avoid mixed use of the refrigerants/lubricant.
- Never use adapters that convert one size fitting to another: refrigerant/lubricant contamination occurs and compressor malfunction may result.

Tool number (SPX-North America No.) Tool name		Description
Recovery/recycling/recharging equipment (ACR4)	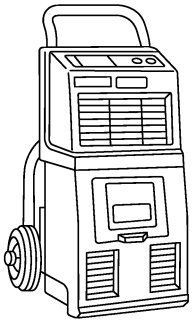 RJIA0195E	Function: Refrigerant recovery, recycling and recharging
Electrical leak detector	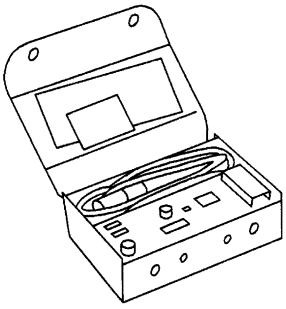 A/C leak detector SHA705EB	Power supply: DC 12 V (Cigarette lighter)
(J-43926) Refrigerant dye leak detection kit Kit includes: (J-42220) UV lamp and UV safety goggles (J-41459) HFC-134a (R-134a) dye injector Use with J-41447, 1/4 ounce bottle (J-41447) HFC-134a (R-134a) fluorescent leak detection dye (Box of 24, 1/4 ounce bottles) (J-43872) Refrigerant dye cleaner	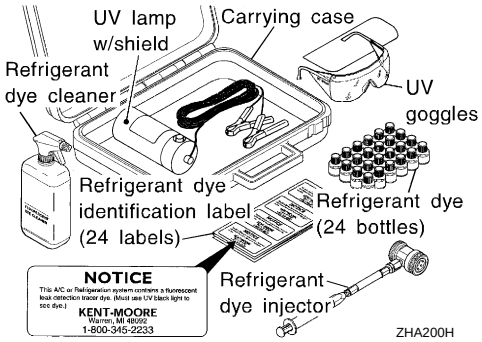 ZHA200H	Power supply: DC 12 V (Battery terminal)

Tool number (SPX-North America No.) Tool name		Description
(J-42220) UV lamp and UV safety goggles	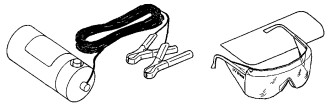 SHA438F	Power supply: DC 12 V (Battery terminal) For checking refrigerant leak when fluorescent dye is installed in A/C system Includes: UV lamp and UV safety goggles
(J-41447) HFC-134a (R-134a) fluorescent leak detection dye (Box of 24, 1/4 ounce bottles)	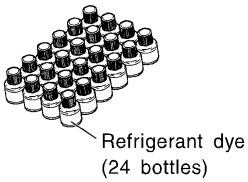 SHA439F	Application: For HFC-134a (R-134a) PAG oil Container: 1/4 ounce (7.4 cc) bottle (Includes self-adhesive dye identification labels for affixing to vehicle after charging system with dye.)
(J-41459) HFC-134a (R-134a) dye injector Use with J-41447, 1/4 ounce bottle	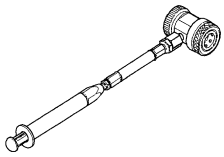 SHA440F	For injecting 1/4 ounce of fluorescent leak detection dye into A/C system
(J-43872) Refrigerant dye cleaner	 SHA441F	For cleaning dye spills
Manifold gauge set (with hoses and couplers)	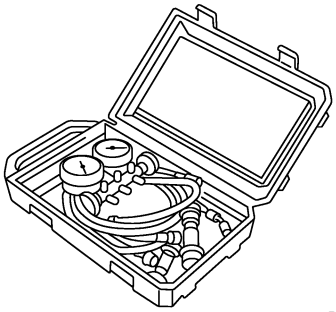 RJIA0196E	Identification: • The gauge face indicates HFC-134a (R-134a). Fitting size: Thread size • 1/2″-16 ACME
Service hoses • High-pressure side hose • Low-pressure side hose • Utility hose	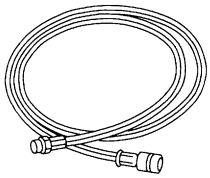 S-NT201	Hose color: • Low-pressure side hose: Blue with black stripe • High-pressure side hose: Red with black stripe • Utility hose: Yellow with black stripe or green with black stripe Hose fitting to gauge: • 1/2″-16 ACME

Tool number (SPX-North America No.) Tool name		Description
Service couplers • High-pressure side coupler • Low-pressure side coupler	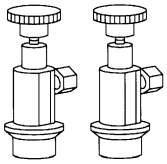 S-NT202	Hose fitting to service hose: M14 x 1.5 fitting is optional or permanently attached.
Refrigerant weight scale	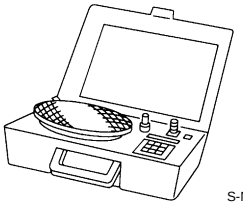 S-NT200	For measuring of refrigerant Fitting size: Thread size 1/2″-16 ACME
Vacuum pump (Including the isolator valve)	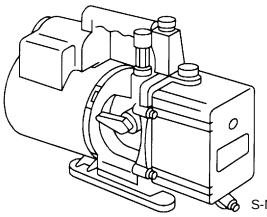 S-NT203	Capacity: • Air displacement: 4 CFM • Micron rating: 20 microns • Oil capacity: 482 g (17 oz.) Fitting size: Thread size • 1/2″-16 ACME

Sealant or/and Lubricant

INFOID:0000000003795894

HFC-134a (R-134a) Service Tool and Equipment

- Never mix HFC-134a (R-134a) refrigerant and/or its specified lubricant with CFC-12 (R-12) refrigerant and/or its lubricant.
- Separate and non-interchangeable service equipment must be used for handling each type of refrigerant/lubricant.
- Refrigerant container fittings, service hose fittings and service equipment fittings (equipment which handles refrigerant and/or lubricant) are different between CFC-12 (R-12) and HFC-134a (R-134a). This is to avoid mixed use of the refrigerants/lubricant.
- Never use adapters that convert one size fitting to another: refrigerant/lubricant contamination occurs and compressor malfunction may result.

Tool name		Description
HFC-134a (R-134a) refrigerant	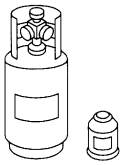 S-NT196	Container color: Light blue Container marking: HFC-134a (R-134a) Fitting size: Thread size • Large container 1/2″-16 ACME
NISSAN A/C System Oil Type S (DH-PS)	 S-NT197	Type: Polyalkylene glycol oil (PAG), type S (DH-PS) Application: HFC-134a (R-134a) swash plate compressors (Nissan only) Capacity: 40 m ℓ (1.4 Imp fl oz.)

ON-VEHICLE MAINTENANCE

REFRIGERANT

Collection and Charge

INFOID:0000000003795980

SETTING OF SERVICE TOOLS AND EQUIPMENT

Discharging Refrigerant

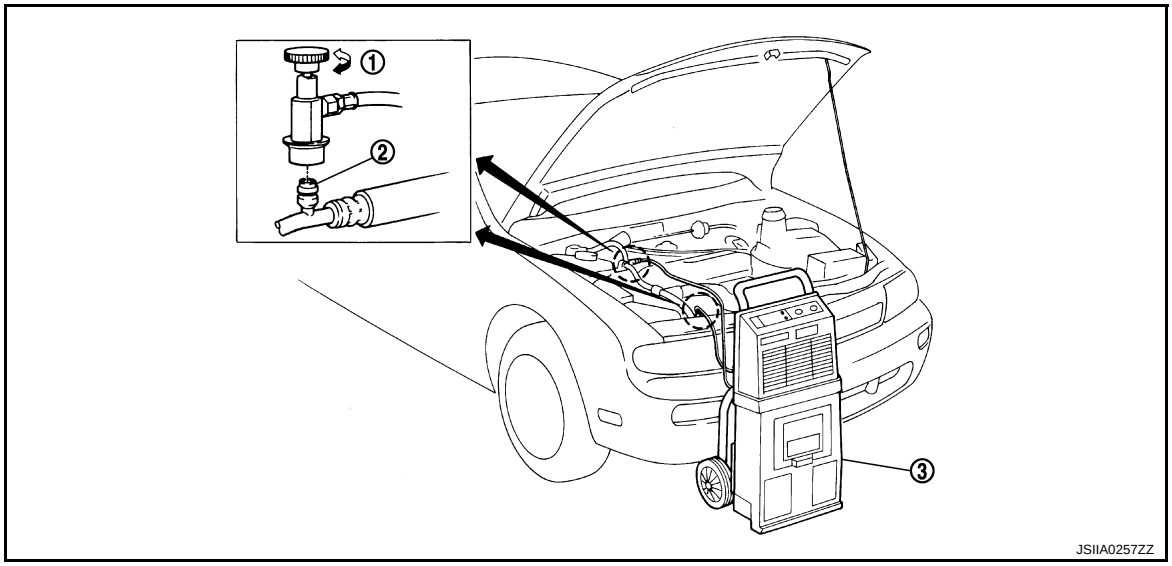

1. Shut-off valve
2. A/C service valve
3. Recovery/recycling recharging equipment

Evacuating System and Charging Refrigerant

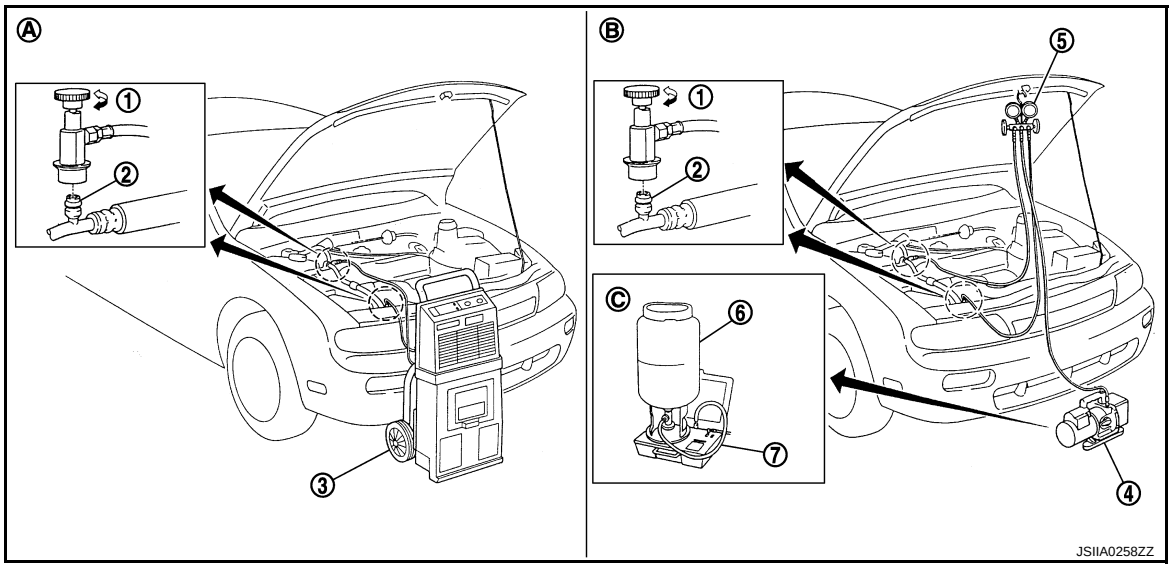

1. Shut-off valve
2. A/C service valve
3. Recovery/recycling recharging equipment
4. Vacuum pump
5. Manifold gauge set
6. Refrigerant container (HFC-134a)
7. Weight scale

A. Preferred (best) method
B. Alternative method
C. For charging

Procedure

WARNING:
Never breath A/C refrigerant and lubricant vapor or mist. Exposure may irritate eyes, nose and throat. Use only approved recovery/recycling recharging equipment to discharge HFC-134a (R-134a) refrigerant. Ventilate work area before resuming service if accidental system discharge occurs. Additional health and safety information may be obtained from refrigerant and lubricant manufacturers.

1. CHECK A/C SYSTEM

1. Check that A/C system operates normally. Refer to the following.
- HAC-8, "Description & Inspection" (WITHOUT 7 INCH DISPLAY)
- HAC-108, "WITHOUT INTELLIGENT AIR CONDITIONER SYSTEM : Description & Inspection" [WITH 7 INCH DISPLAY (WITHOUT INTELLIGENT AIR CONDITIONER SYSTEM)]
- HAC-112, "WITH INTELLIGENT AIR CONDITIONER SYSTEM : Description & Inspection" [WITH 7 INCH DISPLAY (WITH INTELLIGENT AIR CONDITIONER SYSTEM)]

2. Check if there is a large amount of leakage of refrigerant or oil.
   CAUTION:
   Never perform the lubricant return operation if a large amount of leakage of lubricant is detected.

Is the inspection result normal?

YES >> GO TO 2.
NO >> Check for refrigerant leakage. Refer to HA-32, "Inspection".

2. LUBRICANT RETURN OPERATION

1. Start the engine and run it as follows.
- Engine speed: Idle - 1,200 rpm
- A/C switch: ON
- Blower speed: Max. position
- Air inlet: Recirculation (REC)
- Set temperature: FULL HOT

2. Perform lubricant return operation for approximately 10 minutes.
3. Stop the engine.

>> GO TO 3.

3. CHECK RECOVERY/RECYCLING RECHARGING EQUIPMENT

1. Operate recovery/recycling recharging equipment.
   CAUTION:
   - **Follow the instructions of the manufacturer for the handling or maintenance of the equipment.**
   - **Never fill the equipment with undesignated refrigerant.**
2. Check the gauge pressure of recovery/recycling recharging equipment.

Is there pressure?

YES >> GO TO 4.
NO >> GO TO 5.

4. DISCHARGE REFRIGERANT INSIDE PIPES

Discharge the refrigerant from the high-pressure hose and low-pressure hose of recovery/recycling recharging equipment.

>> GO TO 5.

5. CONNECT RECOVERY/RECYCLING RECHARGING EQUIPMENT

1. Remove the service valve caps from the vehicle.
2. Connect recovery/recycling recharging equipment to the service valves.

>> GO TO 6.

6. DISCHARGE REFRIGERANT FROM THE VEHICLE

Operate recovery/recycling recharging equipment to discharge the refrigerant from the vehicle.

>> GO TO 7.

7. REMOVE ANY REMAINING REFRIGERANT

Evacuate air for approximately 10 minutes or more to remove any remaining refrigerant integrated to the compressor oil, etc.

>> GO TO 8.

8. REPLACE OR REPAIR REFRIGERANT SYSTEM PARTS

1. Replace or repair the malfunctioning part.
   CAUTION:
   - **Always use a new O-ring for the parts that the cooler system was removed.**
   - **Apply compressor oil to the O-rings of piping when installing the piping. However, never apply it to the threads.**
2. Adjust the compressor oil amount according to the replaced parts. Refer to HA-28, "Maintenance of Lubricant Quantity".

>> GO TO 9.

9. EVACUATE AIR FROM THE REFRIGERANT SYSTEM

Evacuate air from the refrigerant system for approximately 25 minutes or more.
CAUTION:
Evacuate air for at least approximately 15 minutes or more if the parts are replaced.

>> GO TO 10.

10. CHECK AIRTIGHTNESS OF REFRIGERANT SYSTEM

Check the airtightness of the refrigerant system for approximately 25 minutes or more.
CAUTION:
Check the airtightness for at least approximately 15 minutes or more if the parts are replaced.

Does the pressure decrease?

YES >> GO TO 11.
NO >> GO TO 8.

11. CHECK REFRIGERANT LEAKAGE

1. Connect refrigerant recovery/recycling recharging equipment or manifold gauge set (SST).
2. Charge the refrigerant of approximately 200 g to the refrigerant system.
3. Check for refrigerant leakage. Refer to HA-32, "Inspection".
   NOTE:
   When using electrical leak detector (SST). Refer to HA-33, "Inspection".

Is the inspection result normal?

YES >> GO TO 12.
NO >> Repair or replace parts according to the inspection results.

12. CHARGE REFRIGERANT

1. Connect recovery/recycling recharging equipment or manifold gauge set (SST).
2. Evacuate air again.
3. Charge the specified amount of refrigerant to the refrigerant system.

>> GO TO 13.

13. CHECK REFRIGERANT LEAKAGE

Check for refrigerant leakage again. Refer to HA-32, "Inspection".
NOTE:
When using electrical leak detector (SST). Refer to HA-33, "Inspection".

Is the inspection result normal?

YES >> GO TO 14.
NO >> GO TO 6.

14. CHECK OPERATION

Check the A/C system for normal operation. Refer to HA-30, "Inspection".

Is the inspection result normal?

YES >> GO TO 15.
NO >> Repair or replace parts according to the inspection results.

15. CHECK RECOVERY/RECYCLING RECHARGING EQUIPMENT

1. Disconnect recovery/recycling recharging equipment or manifold gauge set (SST).
2. Discharge the refrigerant from the high-pressure hose and low-pressure hose of the recovery/recycling recharging equipment.
3. Install the service valve caps.

>> END

LUBRICANT

Maintenance of Lubricant Quantity

INFOID:0000000003795916

The lubricant in the compressor circulates through the system the refrigerant. Add lubricant to compressor when replacing any component or after a large refrigerant leakage occurred. It is important to maintain the specified amount.
If lubricant quantity is not maintained properly, the following malfunctions may result:
- Lack of lubricant: May lead to a seized compressor.
- Excessive lubricant: Inadequate cooling (thermal exchange interference)

LUBRICANT

Name : NISSAN A/C System Oil Type S

LUBRICANT RETURN OPERATION

Adjust the lubricant quantity according to the test group shown below.

1. CHECK LUBRICANT RETURN OPERATION

Can lubricant return operation be performed?
- A/C system works normally.
- There is no evidence of a large amount of lubricant leakage.

CAUTION:
Never perform the lubricant return operation if excessive lubricant leakage is detected.

Is it successful?

YES >> GO TO 2.
NO >> GO TO 3.

2. PERFORM LUBRICANT RETURN OPERATION

1. Start the engine, and set to the following conditions:
- Engine speed: Idling to 1,200 rpm
- A/C switch: ON
- Blower speed: Max. position
- Set temperature: FULL HOT
- Intake position: Recirculation (REC)

2. Perform lubricant return operation for approximately 10 minutes.
3. Stop the engine.

>> GO TO 3.

3. CHECK REPLACEMENT PART

Should the compressor be replaced?

YES >> Refer to HA-29, "Lubricant Adjusting Procedure for Compressor Replacement".
NO >> Refer to HA-28, "Lubricant Adjusting Procedure for Components Replacement Except Compressor".

Lubricant Adjusting Procedure for Components Replacement Except Compressor

INFOID:0000000003795917

Add the correct amount of lubricant to the system after replacing any of the following major components.
Amount of lubricant to be added:

Part replaced	Lubricant to be added to system	Remarks
	Amount of lubricant m ℓ (Imp fl oz.)	
Evaporator	75 (2.6)	—
Condenser	35 (1.2)	—
Liquid tank	10 (0.4)	—

Part replaced	Lubricant to be added to system	Remarks
	Amount of lubricant m ℓ (Imp fl oz.)	
In case of refrigerant leakage	30 (1.1)	Large leakage
	—	Small leakage *

*: No addition of lubricant is needed if the refrigerant leakage is small.

Lubricant Adjusting Procedure for Compressor Replacement

INFOID:0000000003795918

1. Check recovery/recycling recharging equipment gauges before connecting recovery/recycling recharging equipment to vehicle. No refrigerant pressure should be displayed. Recover refrigerant from the equipment lines if NG.
2. Discharge refrigerant into the recovery/recycling recharging equipment. Measure lubricant discharged into the recovery/recycling recharging equipment.
3. Drain the lubricant from the old (removed) compressor into a graduated container and recover the amount of lubricant drained.
4. Drain the lubricant from the new compressor into a separate. Then clean container.
5. Measure an amount of new lubricant installed equal to amount drained from old compressor. Add this lubricant to new compressor through the suction port opening.
6. Measure an amount of new lubricant equal to the amount recovered during discharging. Add this lubricant to new compressor through the suction port opening.
7. Add another 5 m ℓ (0.2 Imp fl oz.) of lubricant at this time if the liquid tank also needs to be replaced.
   Do not add this 5 m ℓ (0.2 Imp fl oz.) of lubricant when replacing the compressor only.

Lubricant adjusting procedure for compressor replacement

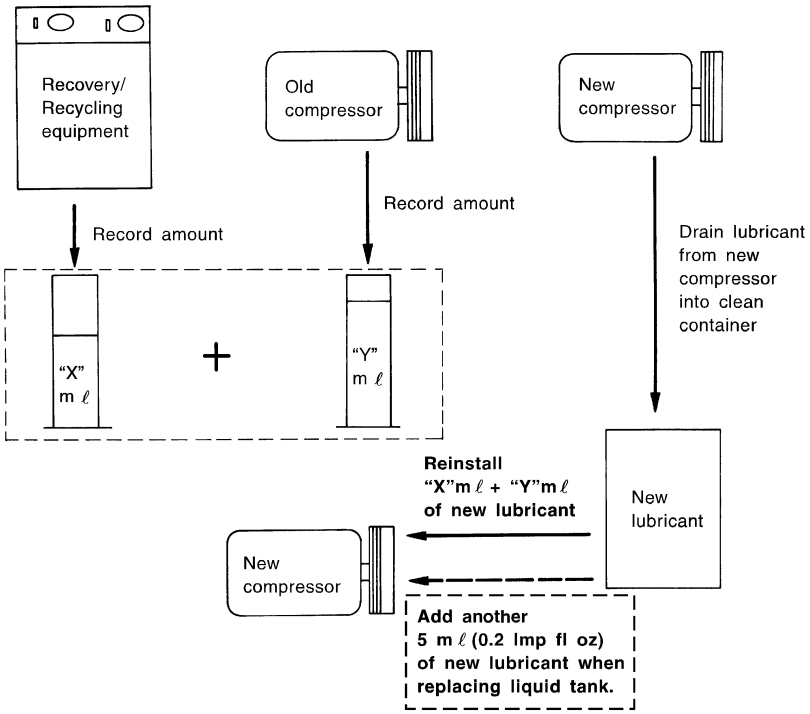

SJIA0596E

REFRIGERATION SYSTEM

Inspection

INFOID:0000000003795977

1. CHECK BLOWER MOTOR OPERATION

Check blower motor operation. Refer to the following.
- HAC-68, "Component Function Check" (WITHOUT 7 INCH DISPLAY)
- HAC-193, "Component Function Check" (WITH 7 INCH DISPLAY)

Is the inspection result normal?

YES >> GO TO 2.
NO >> Repair or replace the parts according to the inspection results.

2. CHECK COMPRESSOR OPERATION

Check compressor operation. Refer to the following.
- HAC-72, "Component Function Check" (WITHOUT 7 INCH DISPLAY)
- HAC-197, "Component Function Check" (WITH 7 INCH DISPLAY)

Is the inspection result normal?

YES >> GO TO 3.
NO >> Repair or replace the parts according to the inspection results.

3. CHECK REFRIGERANT CYCLE PRESSURE

Connect recovery/recycling recharging equipment to the vehicle and perform the diagnosis with the gauge pressure. Refer to HA-8, "Trouble Diagnosis For Unusual Pressure".

Is the inspection result normal?

YES >> Perform the performance test. Refer to HA-30, "Performance Chart".
NO >> Repair or replace the parts according to the inspection results.

Performance Chart

INFOID:0000000003795978

TEST CONDITION

Testing must be performed as per the following:

Vehicle condition	Indoors or in the shade (in a well-ventilated place)
Doors	Closed
Door windows	Open
Hood	Open
Temperature control switch or dial	Max. COLD
Mode switch	(Ventilation) set
Intake switch	(Recirculation) set
Fan (blower) speed	Max. speed set
Engine speed	Idle speed
Operate the air conditioning system for 10 minutes before taking measurements.	

TEST READING

Recirculating-to-discharge Air Temperature Table

Inside air (Recirculating air) at blower assembly inlet		Discharge air temperature at center ventilator °C (°F)
Relative humidity %	Air temperature °C (°F)	
50 - 60	25 (77)	8.4 - 10.9 (47 - 52)
	30 (86)	12.3 - 15.3 (54 - 60)
	35 (95)	15.8 - 19.2 (60 - 67)

Inside air (Recirculating air) at blower assembly inlet		Discharge air temperature at center ventilator °C (°F)
Relative humidity %	Air temperature °C (°F)	
60 - 70	25 (77)	10.9 - 13.4 (52 - 56)
	30 (86)	15.3 - 18.3 (60 - 65)
	35 (95)	19.2 - 22.7 (67 - 73)

Ambient Air Temperature-to-operating Pressure Table

Ambient air		High-pressure (Discharge side) kPa (bar, kg/cm^2, psi)	Low-pressure (Suction side) kPa (bar, kg/cm^2, psi)
Relative humidity %	Air temperature °C (°F)		
50 -70	25 (77)	1,065 - 1,295 (10.62 - 12.95, 10.9 - 13.2, 154.4 - 187.8)	215 - 261 (2.15 - 2.61, 2.1 - 2.6, 31.2 - 37.9)
	30 (86)	920 - 1,120 (9.20 - 11.20, 9.4 - 11.4, 133.4 - 162.4)	230 - 287 (2.30 - 2.87, 2.3 - 2.9, 33.4 - 41.6)
	35 (95)	1,150 - 1,406 (11.50 - 14.06, 11.7 - 14.3, 167.0 - 203.9)	287 - 355 (2.87 - 3.55, 2.9 - 3.6, 41.6 - 51.5)
	40 (104)	1,363 - 1,659 (13.63 - 16.59, 13.9 - 16.9, 197.7 - 240.6)	320 - 392 (3.20 - 3.92, 3.3 - 3.9, 46.4 - 56.9)

Refrigerant Leakages

INFOID:0000000003795979

Perform a visual inspection of all refrigeration parts, fittings, hoses and components for signs of A/C lubricant leakage, damage and corrosion. A/C lubricant leakage may indicate an area of refrigerant leakage. Allow extra inspection time in these areas when using either an electrical leak detector or fluorescent dye leak detector (SST: J-42220).

Confirm the leakage with an electrical leak detector if dye is observed. It is possible a prior leakage was repaired and not properly cleaned.

Do not stop when one leakage is found but continue checking for additional leakages at all system components and connections when searching for leakages.

Move the probe along the suspected leakage area at 1 to 2 inches per second and no further than 1/4 inch from the component when searching for refrigerant leakages using an electrical leak detector.

CAUTION:

Moving the electrical leak detector probe slower and closer to the suspected leakage area improves the chances of finding a leakage.

FLUORESCENT LEAK DETECTOR

Inspection

INFOID:0000000003795981

CHECKING SYSTEM FOR LEAKAGES USING THE FLUORESCENT LEAK DETECTOR

1. Check A/C system for leakages using the UV lamp and safety goggles (SST: J-42220) in a low sunlight area (area without windows preferable). Illuminate all components, fittings and lines. The dye appears as a bright green/yellow area at the point of leakage. Fluorescent dye observed at the evaporator drain opening indicates an evaporator core assembly (tubes, core or expansion valve) leakage.
2. Use an adjustable mirror or wipe the area with a clean shop rag or cloth, with the UV lamp for dye residue if the suspected area is difficult to see.
3. Remove any residual dye using dye cleaner (SST: J-43872) to prevent future misdiagnosis after the leakage is repaired.
4. Perform a system performance check and verify the leakage repair with an approved electrical leak detector.

NOTE:
Other gases in the work area or substances on the A/C components, for example, anti-freeze, windshield washer fluid, solvents and lubricants, may falsely trigger the leak detector. Make sure the surfaces to be checked are clean.
Clean with a dry cloth or blow off with shop air.
Do not allow the sensor tip of the detector to contact with any substance. This may also cause false readings and may damage the detector.

DYE INJECTION

(This procedure is only necessary when recharging the system or when the compressor has seized and was replaced.)

1. Check A/C system static (at rest) pressure. Pressure must be at least 345 kPa (3.45 bar, 3.52 kg/cm^2, 50 psi).
2. Pour one bottle (1/4 ounce / 7.4 cc) of the A/C refrigerant dye into the injector tool (SST: J-41459).
3. Connect the injector tool to the A/C low-pressure side service valve.
4. Start the engine. Then switch A/C ON.
5. Inject one bottle (1/4 ounce / 7.4 cc) of fluorescent dye through the low-pressure service valve using dye injector tool (SST: J-41459) (refer to the manufacture's operating instructions) when the A/C operating (compressor running).
6. Disconnect the injector tool from the service valve with the engine still running.
   CAUTION:
   Be careful when replacing the A/C system or a component, pour the dye directly into the open system connection and proceed with the service procedures.
7. Operate the A/C system for a minimum of 20 minutes to mix the dye with the system oil. Depending on the leakage size, operating conditions and location of the leakage, it may take from minutes to days for the dye to penetrate a leakage and become visible.
8. Attach a blue label if necessary.

ELECTRICAL LEAK DETECTOR

Inspection

INFOID:0000000003795982

PRECAUTIONS FOR HANDLING LEAK DETECTOR

Use an electrical leak detector (SST) or equivalent when performing a refrigerant leakage check. Ensure that the instrument is calibrated and set properly per the operating instructions.
The leak detector is a delicate device. Read the operating instructions and perform any specified maintenance for using the leak detector properly.

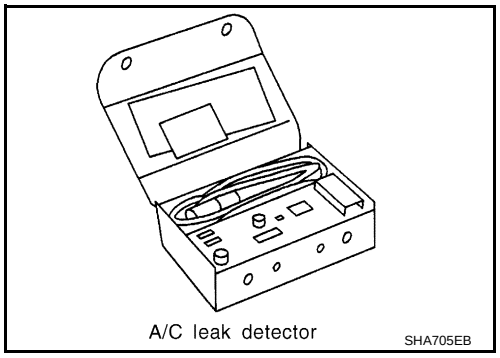

1. Position probe approximately 3 mm (0.12 in) away from point to be checked.

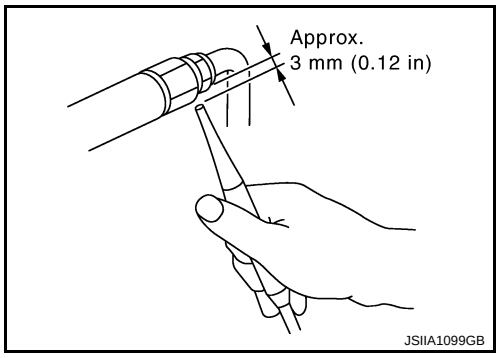

2. Circle each fitting completely with probe when testing.

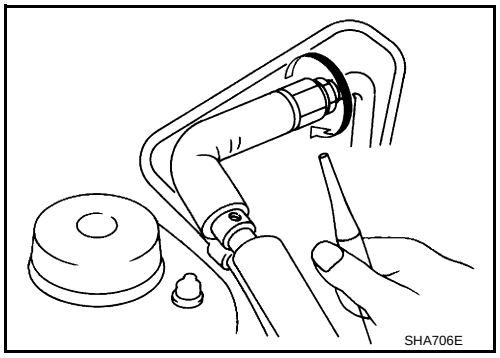

3. Move probe along component approximately 25 to 50 mm (1 to 2 in)/sec.

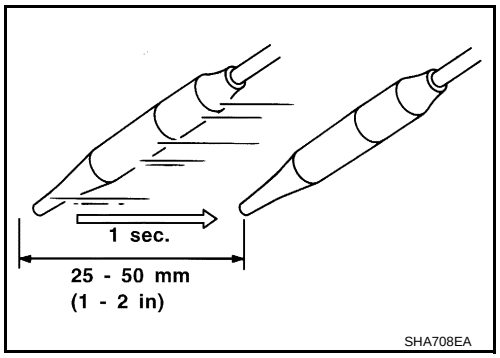

CHECKING PROCEDURE

Check that there is no refrigerant vapor, shop chemicals, or cigarette smoke in the vicinity of the vehicle to prevent inaccurate or false readings. Perform the leakage test in calm area (low air/wind movement) so that the leaking refrigerant is not dispersed.

1. Stop the engine.

2. Connect a suitable A/C manifold gauge set (SST) to the A/C service valves.
3. Check if the A/C refrigerant pressure is at least 345 kPa (3.45 bar, 3.52 kg/cm^2, 50 psi) above 16°C (61°F). Recover/evacuate and recharge the system with the specified amount of refrigerant if less than specification.
   NOTE:
   Leakages may not be detected since the system may not reach 345 kPa (3.45 bar, 3.52 kg/cm^2, 50 psi) at temperatures below 16°C (61°F).
4. Perform the leakage test from the high-pressure side (compressor discharge “a” to evaporator inlet “j”) to the low-pressure side (evaporator drain hose “k” to shaft seal “p”). Perform a leakage check for the following areas carefully. Clean the component to be checked and move the leakage detected probe completely around the connection/component.

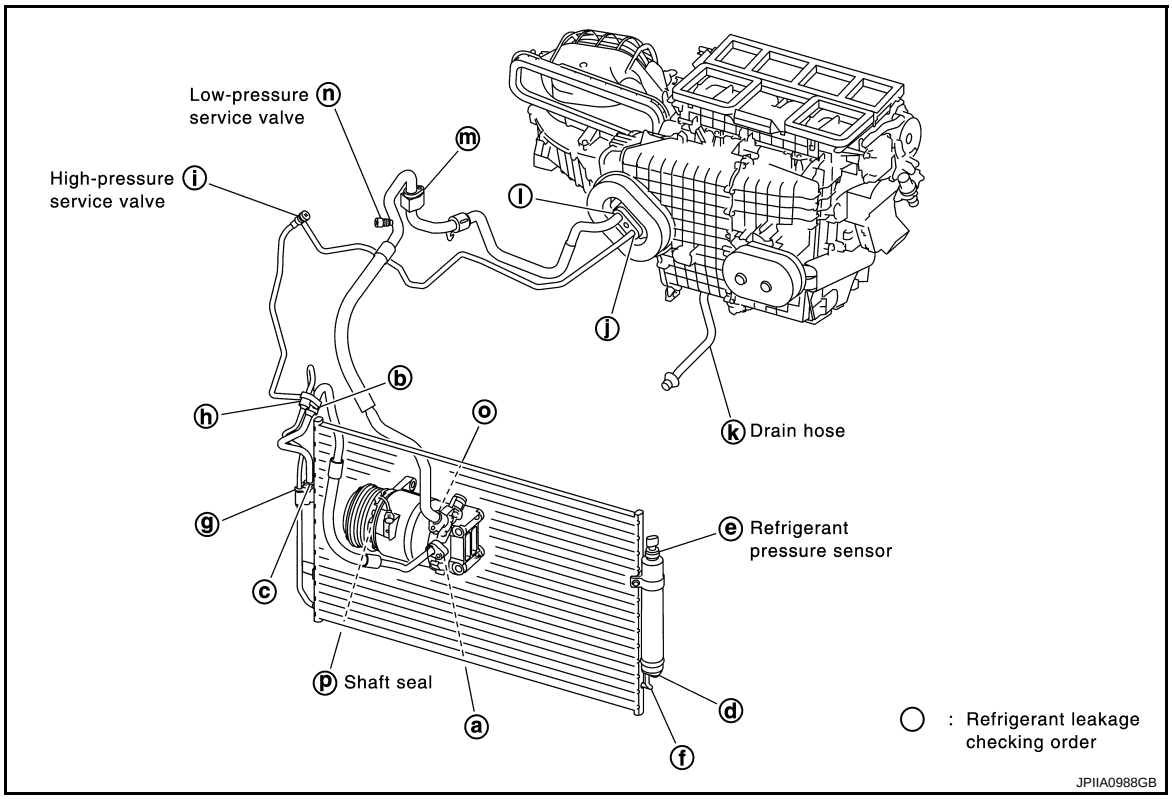

Compressor
Check the fitting of high- and low-pressure flexible hoses, relief valve and shaft seal.
Condenser
Check the fitting of condenser pipe assembly, high-pressure flexible hose and pipe.
Liquid tank
Check the fitting of condenser and refrigerant pressure sensor.
Service valves
Check all around the service valves. Ensure service valve caps are secured on the service valves (to prevent leakages).
NOTE:
Wipe any residue from valves to prevent any false readings by leak detector after removing manifold gauge set (SST) from service valves.
Cooling unit (Evaporator)
Turn blower fan on “High” for at least 15 seconds to dissipate any refrigerant trace in the cooling unit with engine OFF. Wait a minimum of 10 minutes accumulation time (refer to the manufacturer’s recommended procedure for actual wait time) before inserting the leak detector probe into the drain hose.
Keep the probe inserted for at least 10 seconds. Use caution not to contaminate the probe tip with water or dirt that may be in the drain hose.

5. Verify at least once by blowing compressed air into area of suspected leakage, then repeat check as outlined above if a leak detector detects a leakage.
6. Do not stop when one leakage is found. Continue checking for additional leakages at all system components.

If no leakages are found, perform steps 7 - 10.

7. Start the engine.
8. Set the A/C control as per the following;

a. A/C switch: ON
b. Air flow: VENT (Ventilation)
c. Intake door position: Recirculation
d. Temperature setting: Max. cold
e. Fan speed: High

9. Run engine at 1,500 rpm for at least 2 minutes.
10. Stop the engine and perform leakage check again following steps 4 through 6 above.
Refrigerant leakages should be checked immediately after stopping the engine. Begin with the leak detector at the compressor. The pressure on the high-pressure side drops gradually after refrigerant circulation stops and pressure on the low-pressure side rises gradually, as shown in the graph. Some leakages are more easily detected when pressure is high.

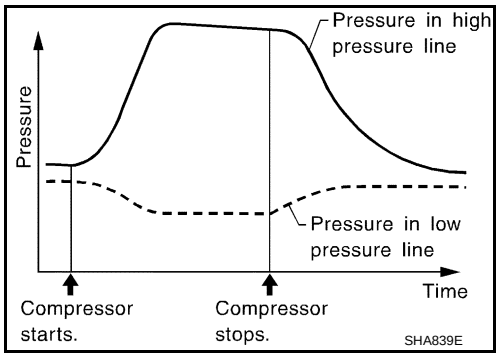

11. Check recovery/recycling recharging equipment gauges before connecting recovery/recycling recharging equipment to vehicle. No refrigerant pressure should be displayed. Recover refrigerant from equipment lines if pressure is displayed.
12. Discharge A/C system using approved refrigerant recovery equipment. Repair the leaking fitting or component if necessary.
13. Evacuate and recharge A/C system and perform the leakage test to confirm no refrigerant leakages.
14. Perform A/C performance test to ensure system works normally. Refer to HA-30, "Performance Chart".

ON-VEHICLE REPAIR

COMPRESSOR

Exploded View

INFOID:0000000003839902

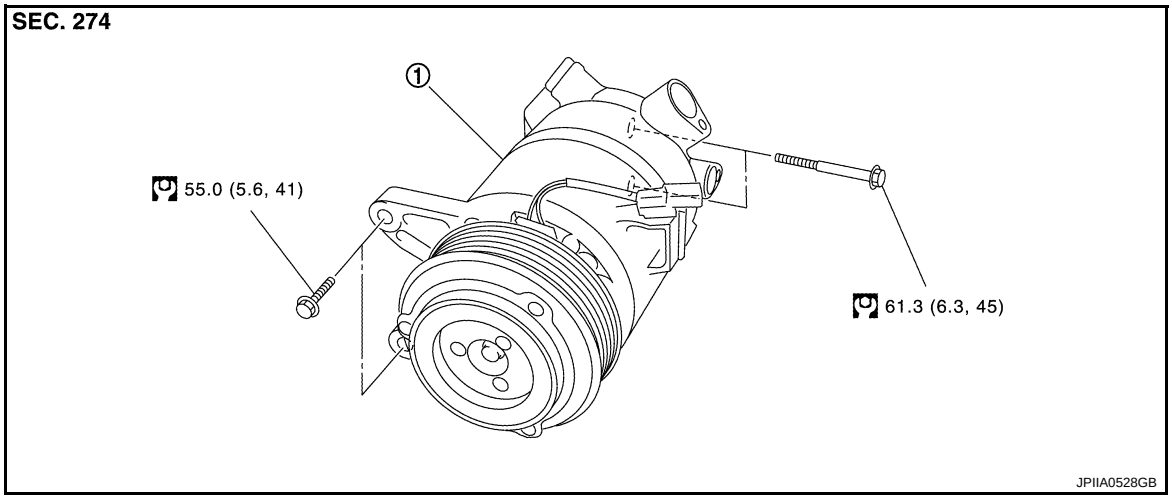

1. Compressor

Refer to GI-4, "Components" for symbols in the figure.

Removal and Installation

INFOID:0000000003839903

REMOVAL

1. Use refrigerant collecting equipment (for HFC-134a) to discharge the refrigerant.
2. Remove air duct. Refer to EM-26, "Exploded View".
3. Disengage the tab, and then move radiator hose (1) to a position where it does not inhibit work (as shown in the figure).

   : Tab

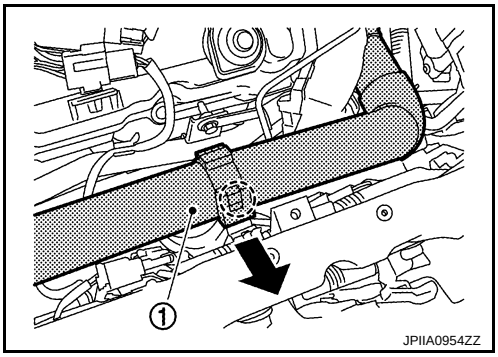

4. Remove mounting bolt (A), and then disconnect low-pressure flexible hose (1) from compressor.
   CAUTION:
   Cap or wrap the joint of the A/C piping and compressor with suitable material such as vinyl tape to avoid the entry of air.
5. Remove mounting bolt (B), and then disconnect high-pressure flexible hose (2) from compressor.
   CAUTION:
   Cap or wrap the joint of the A/C piping and compressor with suitable material such as vinyl tape to avoid the entry of air.

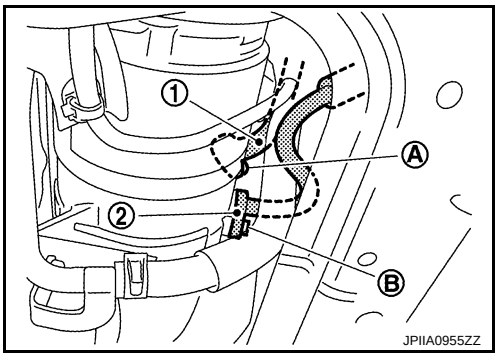

6. Remove under cover. Refer to EXT-28, "Exploded View".
7. Remove splash guard. Refer to EXT-22, "FENDER PROTECTOR : Exploded View".
8. Remove drive belt. Refer to EM-12, "Exploded View".

9. Disconnect the connector (A) and remove the harness clip (B) from compressor.

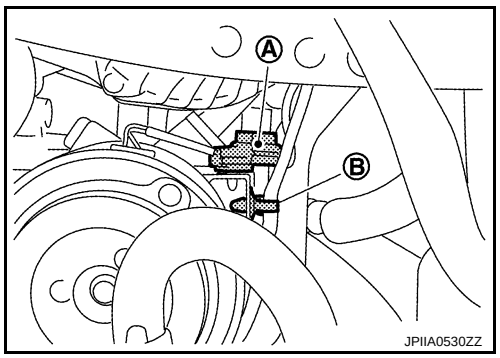

10. Remove mounting bolts (A), and then move oil cooler to a position where it dose not inhibit work.

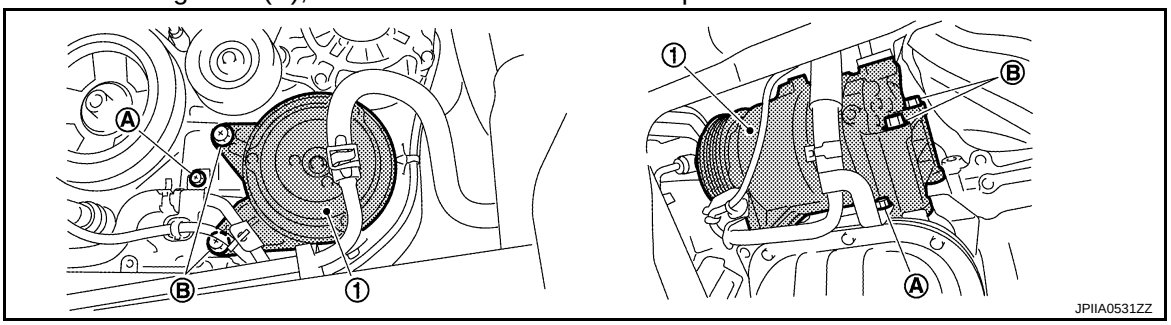

11. Remove mounting bolts (B), and then remove compressor (1) from the lower side of the vehicle.

INSTALLATION

Installation is basically the reverse order of removal.

CAUTION:

- **Replace O-rings with new ones. Then apply compressor oil to them when installing.**
- **Check for leakages when recharging refrigerant.**
- **Check tension of the drive belt after installing compressor. Refer to EM-12, "Checking".**

Inspection

INFOID:0000000003839904

CHECK DISC TO PULLEY CLEARANCE

1. Check the clearance (B) between pulley assembly (1) and clutch disc (2) along the entire periphery with a feeler gauge (A).

Standard : **Refer to HA-59, "Compressor".**

Replace compressor if specified clearance is not obtained.

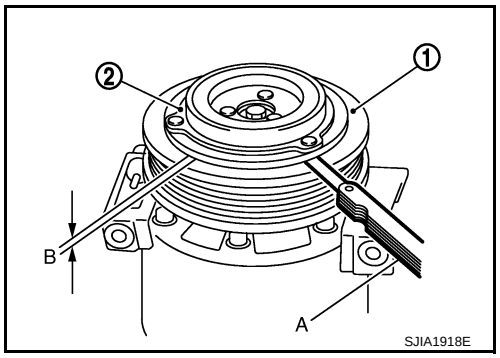

LOW-PRESSURE FLEXIBLE HOSE

Exploded View

INFOID:0000000003858210

Refer to HA-14, "Refrigerant Connection".

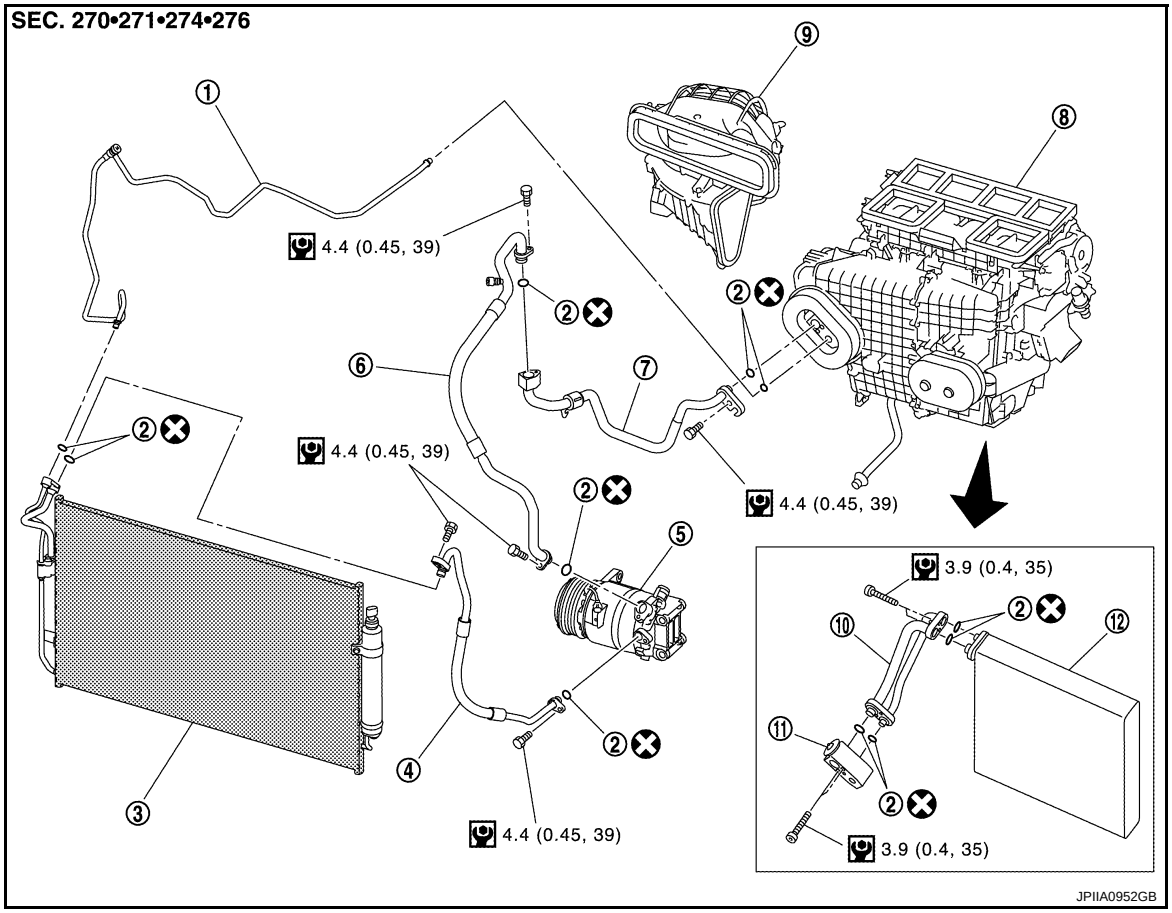

1. High-pressure pipe	2. O-ring	3. Condenser
4. High-pressure flexible hose	5. Compressor	6. Low-pressure flexible hose
7. Low-pressure pipe	8. Heater & cooling unit assembly	9. Blower unit
10. Evaporator pipe assembly	11. Expansion valve	12. Evaporator

Refer to GI-4, "Components" for symbols in the figure.

Removal and Installation

INFOID:0000000003858211

REMOVAL

1. Use refrigerant collecting equipment (for HFC-134a) to discharge the refrigerant.
2. Remove air duct. Refer to EM-26, "Exploded View".
3. Disengage the tab, and then move radiator hose (1) to a position where it does not inhibit (as shown in the figure).

: Tab

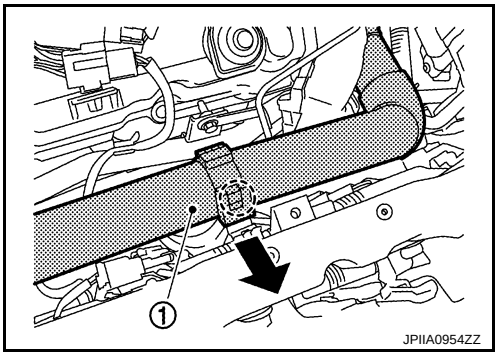

4. Remove mounting bolt (A), and then disconnect low-pressure flexible hose (1) from compressor.
   CAUTION:
   Cap or wrap the joint of the A/C piping and compressor with suitable material such as vinyl tape to avoid the entry of air.

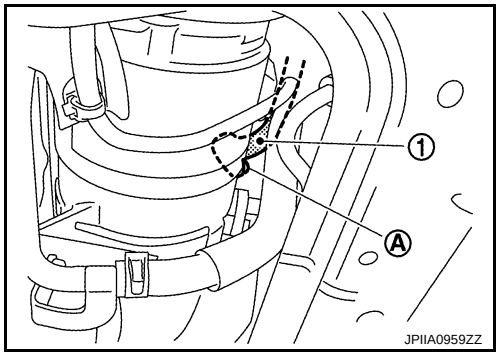

5. Remove mounting bolt (A), and then remove low-pressure flexible hose (1) from low-pressure pipe (2).
   CAUTION:
   Cap or wrap the joint of the A/C piping and compressor with suitable material such as vinyl tape to avoid the entry of air.

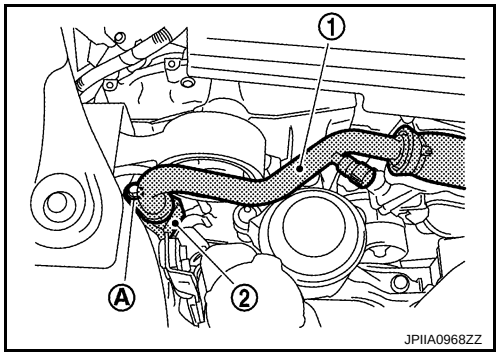

INSTALLATION

Installation is basically the reverse order of removal.

CAUTION:

- **Replace O-rings with new ones. Then apply compressor oil to them when installing.**
- **Check for leakages when recharging refrigerant.**

HIGH-PRESSURE FLEXIBLE HOSE

Exploded View

INFOID:0000000003839908

Refer to HA-14, "Refrigerant Connection".

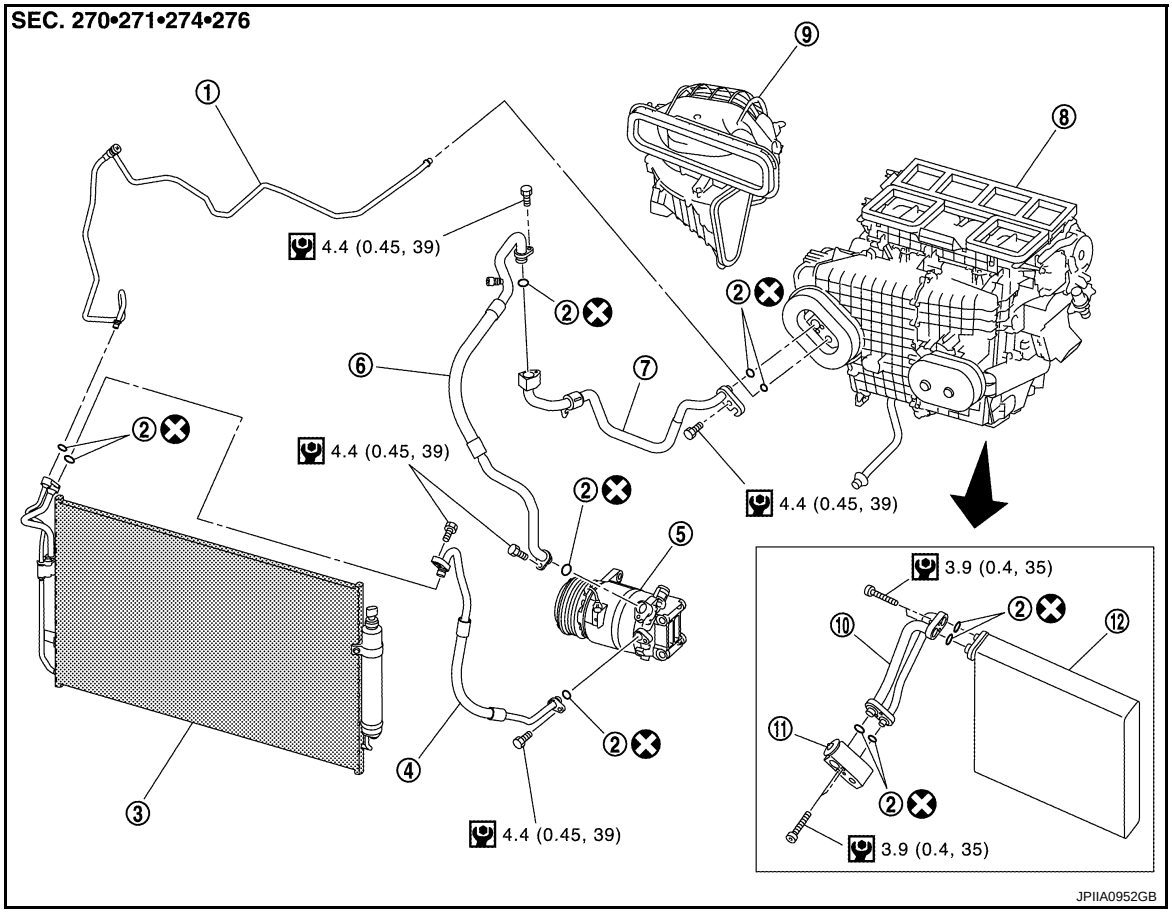

1. High-pressure pipe	2. O-ring	3. Condenser
4. High-pressure flexible hose	5. Compressor	6. Low-pressure flexible hose
7. Low-pressure pipe	8. Heater & cooling unit assembly	9. Blower unit
10. Evaporator pipe assembly	11. Expansion valve	12. Evaporator

Refer to GI-4, "Components" for symbols in the figure.

Removal and Installation

INFOID:0000000003839909

REMOVAL

1. Use refrigerant collecting equipment (for HFC-134a) to discharge the refrigerant.
2. Remove air duct. Refer to EM-26, "Exploded View".
3. Disengage the tab, and then move radiator hose (1) to a position where it does not inhibit (as shown in the figure).

: Tab

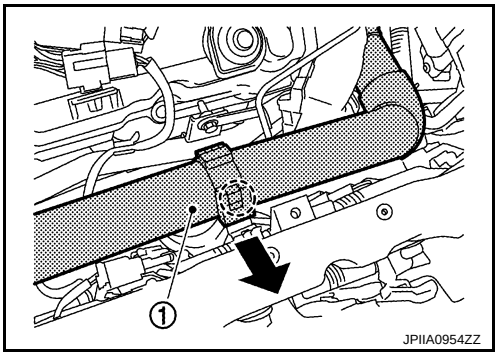

4. Remove mounting bolt (A), and then disconnect high-pressure flexible hose (1) from compressor.
   CAUTION:
   Cap or wrap the joint of the A/C piping and compressor with suitable material such as vinyl tape to avoid the entry of air.

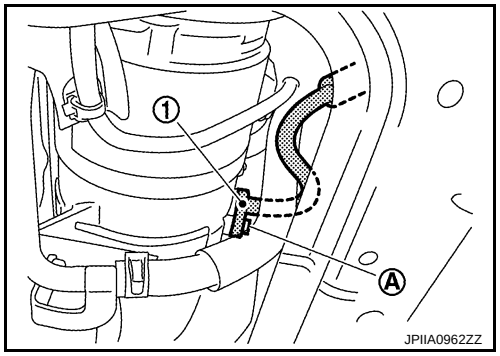

5. Remove mounting bolt (A), and then remove high-pressure flexible hose (1) from condenser pipe assembly.
   CAUTION:
   Cap or wrap the joint of the A/C piping with suitable material such as vinyl tape to avoid the entry of air.

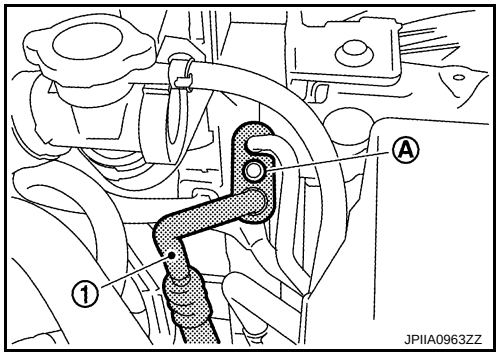

INSTALLATION

Installation is basically the reverse order of removal.

CAUTION:

- **Replace O-rings with new ones. Then apply compressor oil to them when installing.**
- **Check for leakages when recharging refrigerant.**

LOW-PRESSURE PIPE

Exploded View

INFOID:0000000003839910

Refer to HA-14, "Refrigerant Connection".

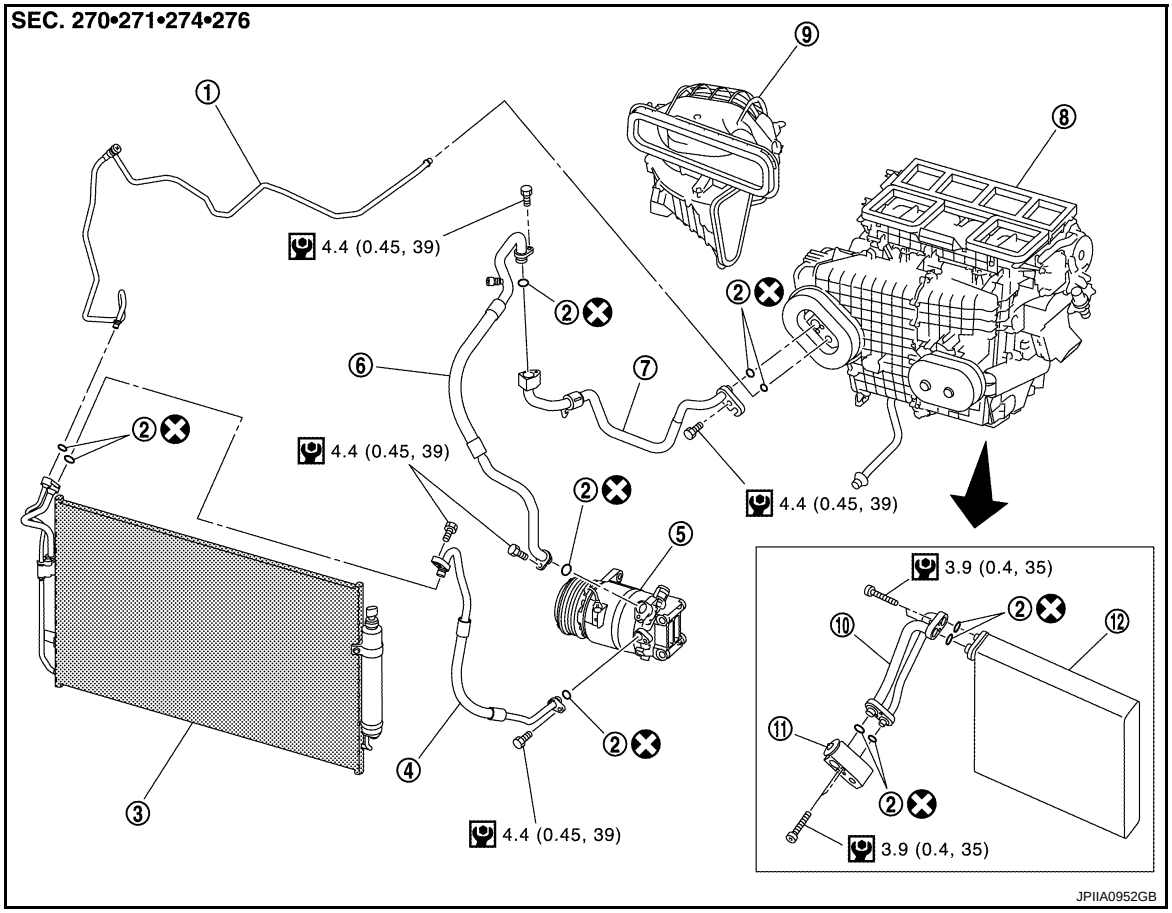

1. High-pressure pipe	2. O-ring	3. Condenser
4. High-pressure flexible hose	5. Compressor	6. Low-pressure flexible hose
7. Low-pressure pipe	8. Heater & cooling unit assembly	9. Blower unit
10. Evaporator pipe assembly	11. Expansion valve	12. Evaporator

Refer to GI-4, "Components" for symbols in the figure.

Removal and Installation

INFOID:0000000003839911

REMOVAL

1. Use refrigerant collecting equipment (for HFC-134a) to discharge the refrigerant.
2. Disengage the tab, and then move power steering reservoir tank (1) to a position where it does not inhibit work.

: Tab

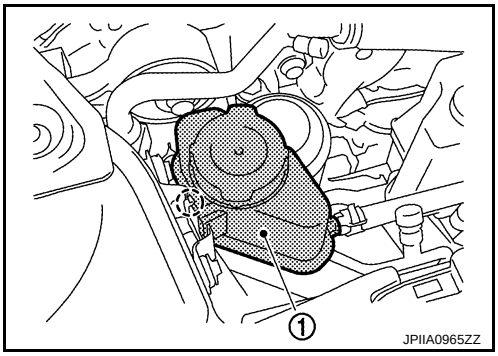

3. Move upper torque rod to a position where it dose not inhibit work. Refer to EM-67, "Exploded View".

4. Remove mounting bolt (A), and then move harness bracket (1) to a position where it dose not inhibit work.

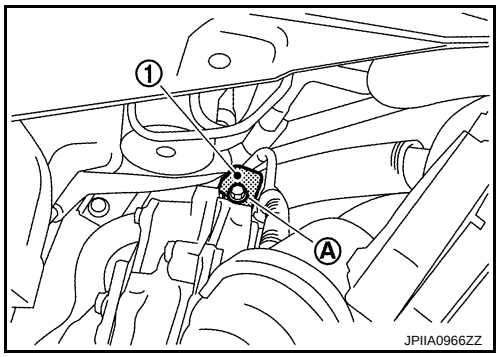

5. Remove mounting bolt (A), and then disconnect low-pressure pipe (1) from expansion valve.
CAUTION:
Cap or wrap the joint of the A/C piping and expansion valve with suitable material such as vinyl tape to avoid the entry of air.

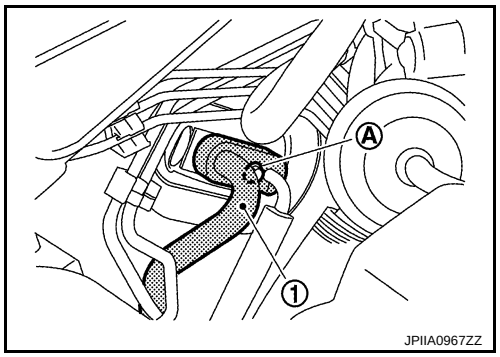

6. Remove mounting bolt (A), and then disconnect low-pressure flexible hose (1) from low-pressure pipe (2).
CAUTION:
Cap or wrap the joint of the A/C piping with suitable material such as vinyl tape to avoid the entry of air.

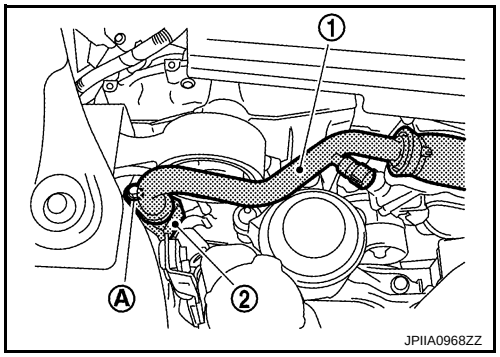

7. Remove mounting nut (A) from low-pressure pipe bracket (2), and then remove low-pressure pipe (1).
CAUTION:
Cap or wrap the joint of the A/C piping with suitable material such as vinyl tape to avoid the entry of air.

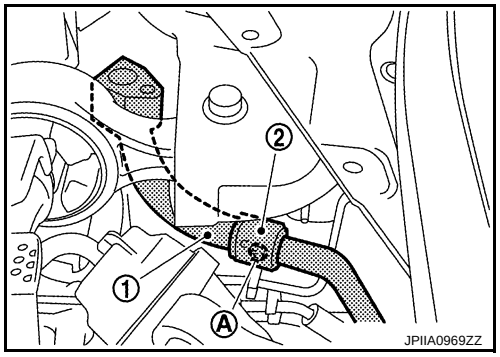

INSTALLATION

Installation is basically the reverse order of removal.

CAUTION:

- **Replace O-rings with new ones. Then apply compressor oil to them when installing.**
- **Check for leakages when recharging refrigerant.**

HIGH-PRESSURE PIPE

Exploded View

INFOID:0000000003839912

Refer to HA-14, "Refrigerant Connection".

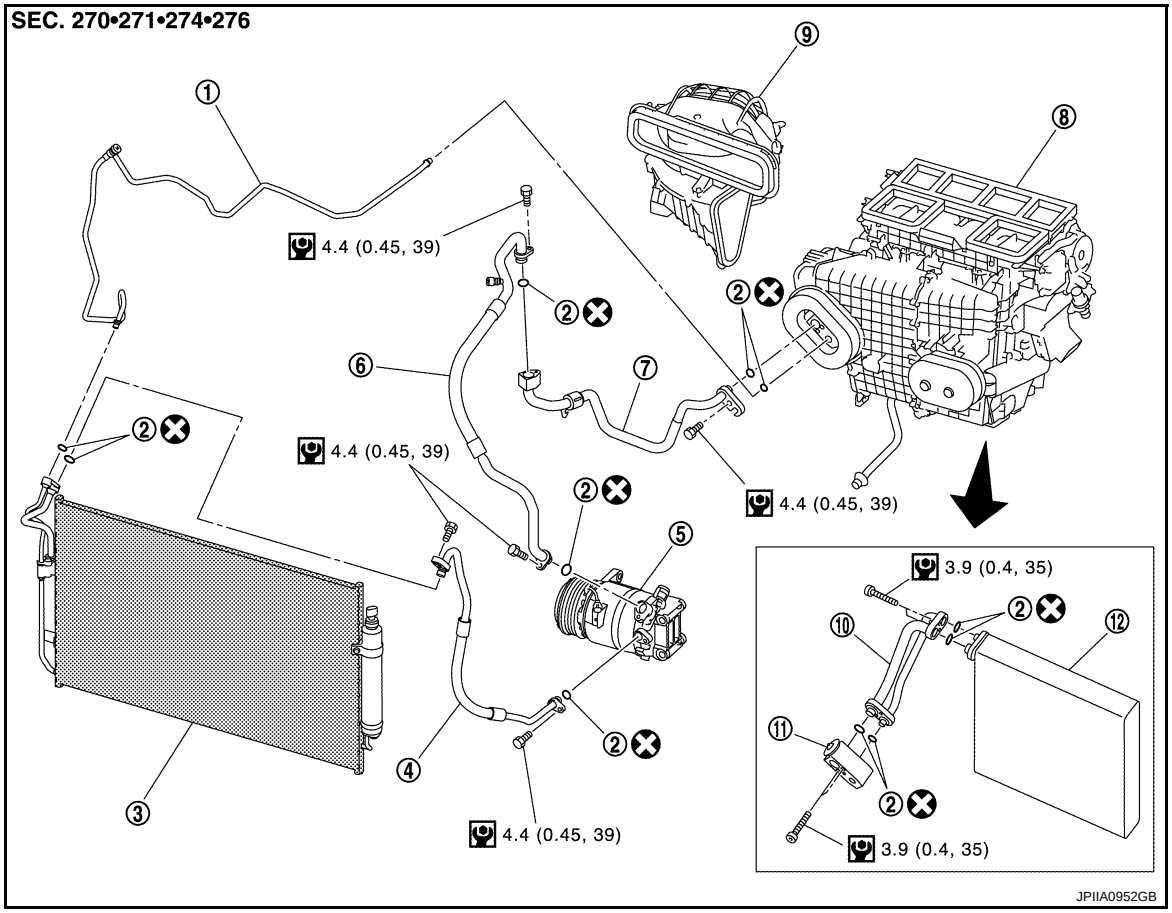

1. High-pressure pipe	2. O-ring	3. Condenser
4. High-pressure flexible hose	5. Compressor	6. Low-pressure flexible hose
7. Low-pressure pipe	8. Heater & cooling unit assembly	9. Blower unit
10. Evaporator pipe assembly	11. Expansion valve	12. Evaporator

Refer to GI-4, "Components" for symbols in the figure.

Removal and Installation

INFOID:0000000003839913

REMOVAL

1. Remove low-pressure pipe. Refer to HA-42, "Exploded View".
2. Disconnect high-pressure pipe (1) from expansion valve.
   CAUTION:
   Cap or wrap the joint of the A/C piping and expansion valve with suitable material such as vinyl tape to avoid the entry of air.

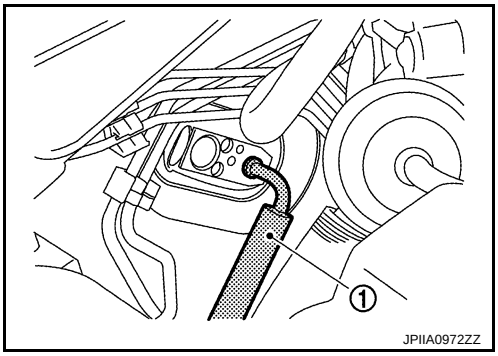

3. Remove mounting bolt (A), and then disconnect high-pressure flexible hose (1) and high-pressure pipe (2) from condenser pipe assembly.
   CAUTION:
   Cap or wrap the joint of the A/C piping with suitable material such as vinyl tape to avoid the entry of air.

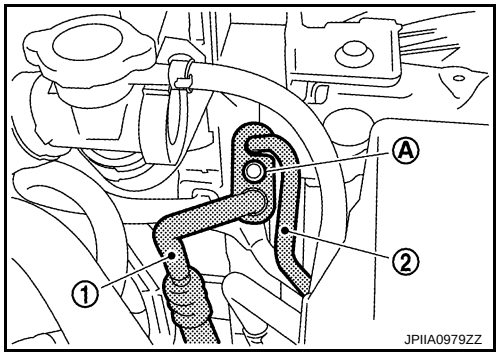

4. Remove reservoir tank. refer to CO-13, "Exploded View".

5. Remove mounting clips (A), and then remove high-pressure pipe (1).

INSTALLATION

Installation is basically the reverse order of removal.

CAUTION:

- **Replace O-rings with new ones. Then apply compressor oil to them when installing.**
- **Check for leakages when recharging refrigerant.**

CONDENSER

Exploded View

INFOID:0000000003795846

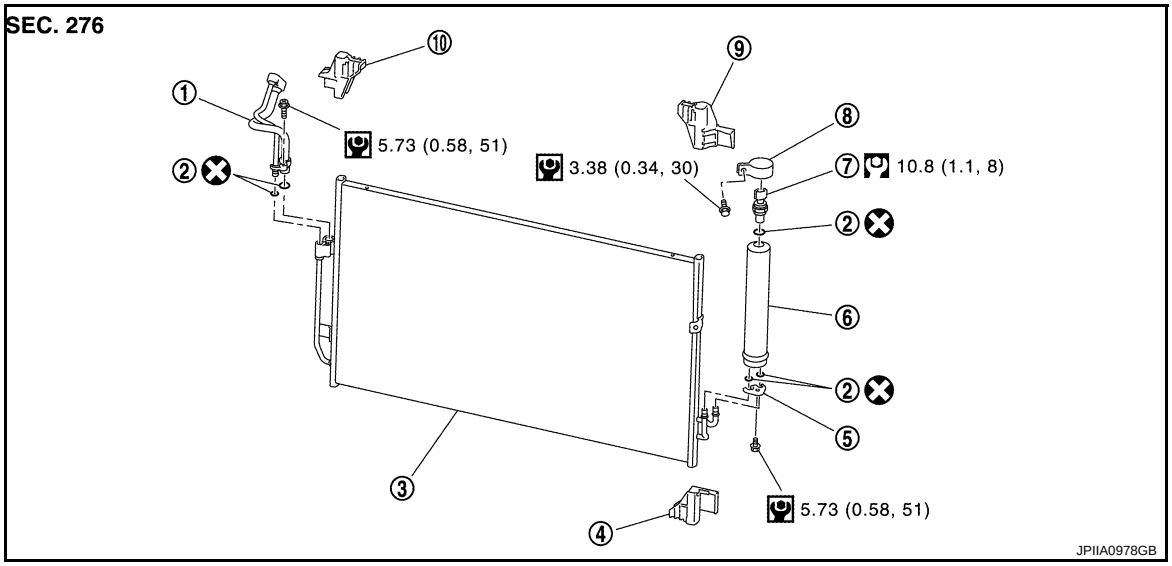

1. Condenser pipe assembly
2. O-ring
3. Condenser
4. Condenser lower bracket LH
5. Bracket
6. Liquid tank
7. Refrigerant pressure sensor
8. Liquid tank bracket
9. Condenser upper bracket LH
10. Condenser upper bracket RH

Refer to GI-4, "Components" for symbols in the figure.

Removal and Installation

INFOID:0000000003839914

REMOVAL

1. Remove condenser pipe assembly. Refer to HA-48, "Exploded View".
2. Remove mounting clip (A).
3. Disconnect hood lock cable (1), and then move hood lock protector (2) to a position where it does not inhibit work.

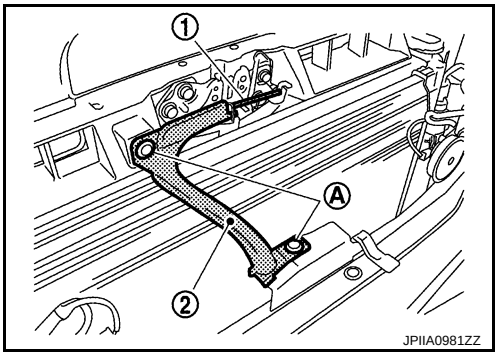

4. Disconnect refrigerant pressure sensor connector (A).

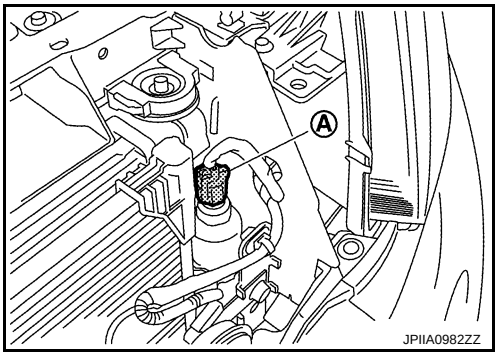

5. Disengage tabs (A).
6. Pull condenser (1) upward of vehicle, and then remove condenser (as shown in the figure).
   CAUTION:
   Be careful not to damage core surface of condenser.

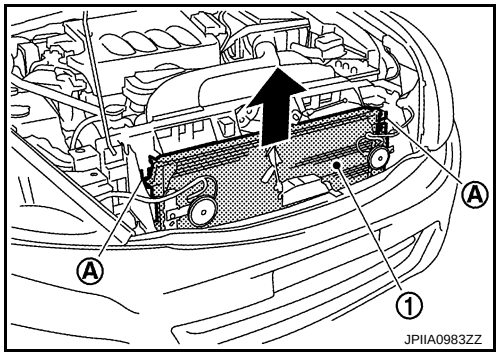

INSTALLATION

Installation is basically the reverse order of removal.

CAUTION:

- **Replace O-rings with new ones. Then apply compressor oil to them when installing.**
- **Check for leakages when recharging refrigerant.**

CONDENSER PIPE ASSEMBLY

Exploded View

INFOID:0000000003795844

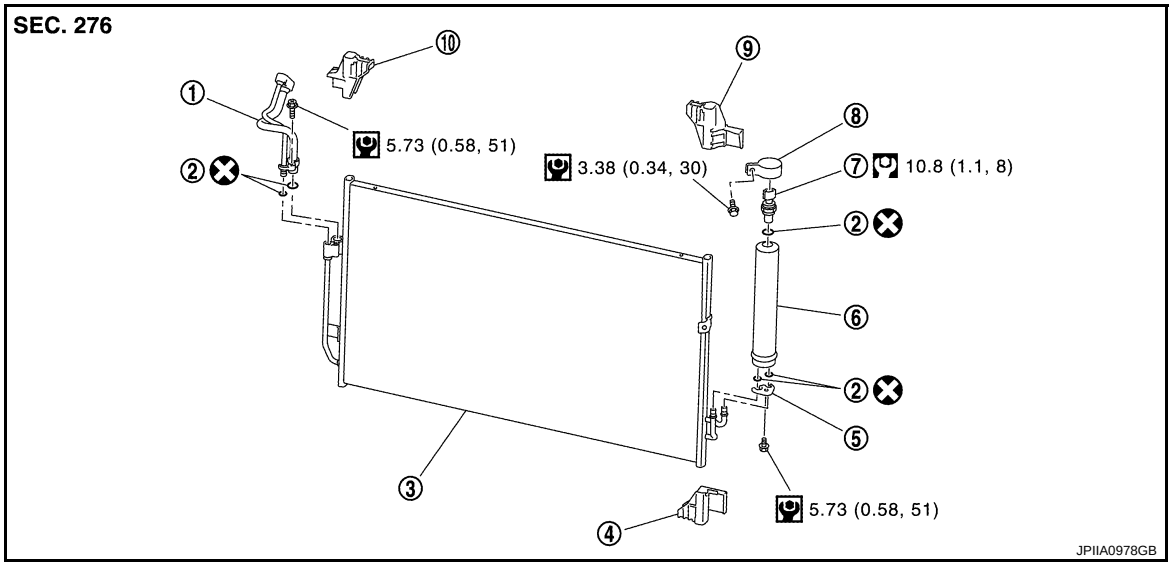

1. Condenser pipe assembly
2. O-ring
3. Condenser
4. Condenser lower bracket LH
5. Bracket
6. Liquid tank
7. Refrigerant pressure sensor
8. Liquid tank bracket
9. Condenser upper bracket LH
10. Condenser upper bracket RH

Refer to GI-4, "Components" for symbols in the figure.

Removal and Installation

INFOID:0000000003795845

REMOVAL

1. Use refrigerant collecting equipment (for HFC-134a) to discharge the refrigerant.
2. Remove mounting bolt (A), and then disconnect high-pressure flexible hose (1) and high-pressure pipe (2) from condenser pipe assembly.
   CAUTION:
   Cap or wrap the joint of the A/C piping with suitable material such as vinyl tape to avoid the entry of air.

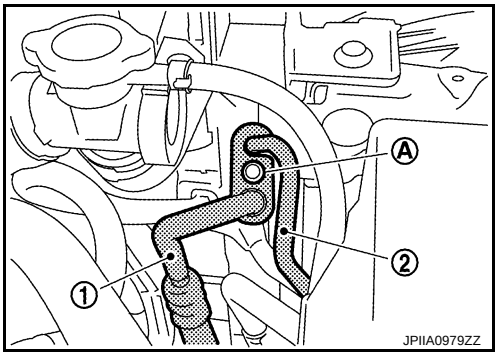

3. Remove mounting bolt (A), and then remove condenser pipe assembly (1) from condenser.
   CAUTION:
   Cap or wrap the joint of the A/C piping and condenser with suitable material such as vinyl tape to avoid the entry of air.

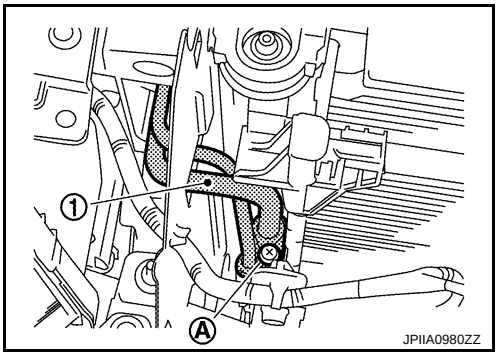

INSTALLATION

Installation is basically the reverse order of removal.

CAUTION:

- **Replace O-rings with new ones. Then apply compressor oil to them when installing.**
- **Check for leakages when recharging refrigerant.**

LIQUID TANK

Exploded View

INFOID:0000000003795848

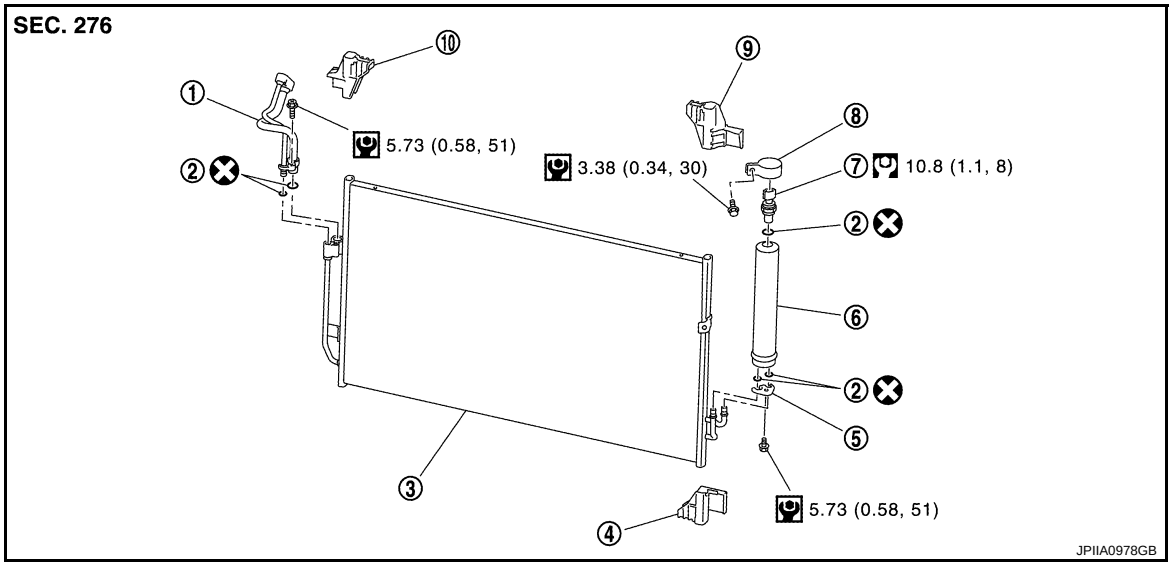

1. Condenser pipe assembly
2. O-ring
3. Condenser
4. Condenser lower bracket LH
5. Bracket
6. Liquid tank
7. Refrigerant pressure sensor
8. Liquid tank bracket
9. Condenser upper bracket LH
10. Condenser upper bracket RH

Refer to GI-4, "Components" for symbols in the figure.

Removal and Installation

INFOID:0000000003795849

REMOVAL

1. Remove condenser. Refer to HA-46, "Exploded View".
2. Clean liquid tank and its surrounding area. Then remove dust and rust from liquid tank.
   CAUTION:
   Be sure to clean carefully.
3. Remove mounting bolts (A), and then remove liquid tank (1).
   CAUTION:
   Cap or wrap the joint of the A/C piping and liquid tank with suitable material such as vinyl tape to avoid the entry of air.

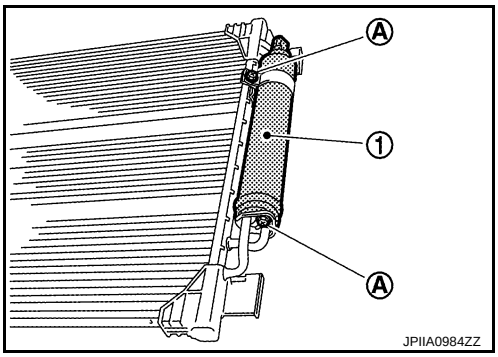

INSTALLATION

Installation is basically the reverse order of removal.

CAUTION:

- **Replace O-rings with new ones. Then apply compressor oil to them when installing.**
- **Check for leakages when recharging refrigerant.**

REFRIGERANT PRESSURE SENSOR

Exploded View

INFOID:0000000003795850

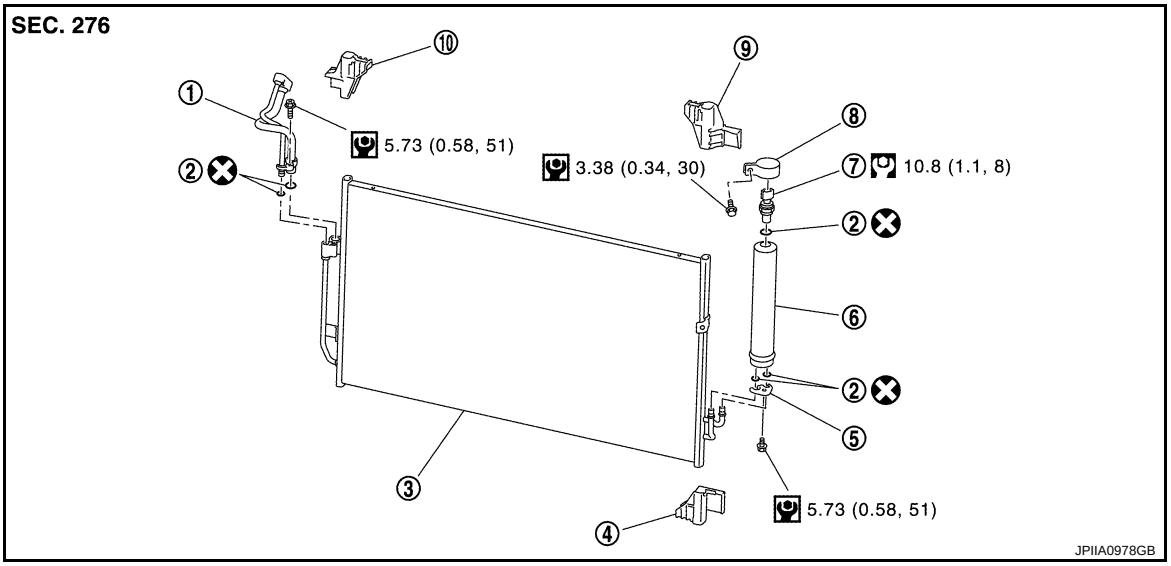

1. Condenser pipe assembly
2. O-ring
3. Condenser
4. Condenser lower bracket LH
5. Bracket
6. Liquid tank
7. Refrigerant pressure sensor
8. Liquid tank bracket
9. Condenser upper bracket LH
10. Condenser upper bracket RH

Refer to GI-4, "Components" for symbols in the figure.

Removal and Installation

INFOID:0000000003795851

REMOVAL

1. Remove liquid tank. Refer to HA-50, "Exploded View".
2. Fix the liquid tank (1) with a vise (A). Remove the refrigerant pressure sensor (2) with a wrench (B).
   CAUTION:
   Be careful not to damage liquid tank.

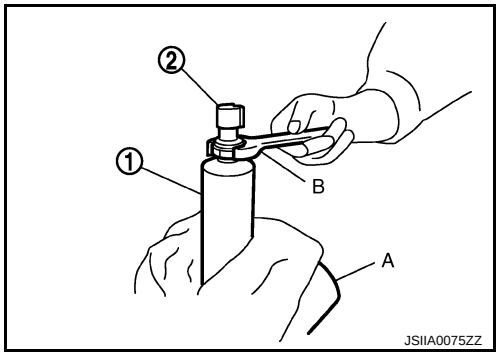

INSTALLATION

Installation is basically the reverse order of removal.

CAUTION:

- **Replace O-rings with new ones. Then apply compressor oil to them when installing.**
- **Check for leakages when recharging refrigerant.**

EVAPORATOR

Exploded View

INFOID:0000000003825218

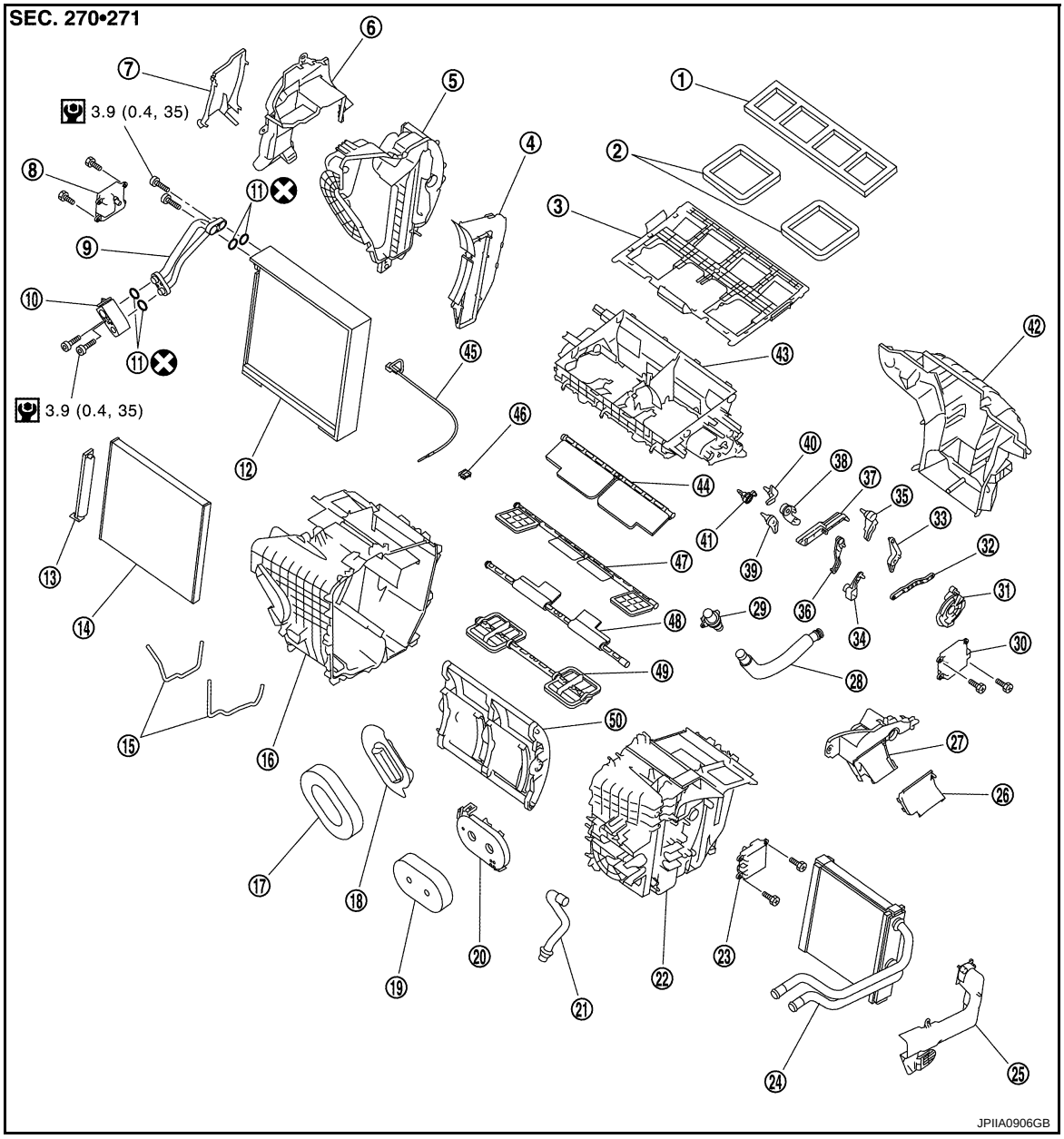

1.	Ventilator seal	2.	Defroster seal	3.	Distributor upper case
4.	Center case	5.	Heater & cooling unit case cover	6.	Foot duct 1 (right)
7.	Foot duct 2 (right)	8.	Air mix door motor (passenger side)	9.	Evaporator pipe assembly
10.	Expansion valve	11.	O-ring	12.	Evaporator
13.	Filter cover	14.	Air conditioner filter	15.	Case packing
16.	Heater & cooling unit case (right)	17.	Cooler pipe grommet	18.	Grommet
19.	Heater pipe grommet	20.	Heater pipe support	21.	Drain hose
22.	Heater & cooling unit case (left)	23.	Air mix door motor (driver side)	24.	Heater core
25.	Heater pipe cover	26.	Foot duct 2 (left)	27.	Foot duct 1 (left)
28.	Aspirator hose	29.	Aspirator	30.	Mode door motor
31.	Main link	32.	Rod link	33.	Ventilator door link
34.	Mode door lever	35.	Ventilator door lever	36.	Max. cool door link

37. Defroster door link
38. Foot door link
39. Max. cool door lever
40. Foot door lever
41. Defroster door lever
42. Adapter case
43. Distributor lower case
44. Ventilator door
45. Intake sensor
46. Intake sensor bracket
47. Foot door
48. Max. cool door
49. Defroster door
50. Air mix door (Slide door)

Refer to GI-4, "Components" for symbols in the figure.

Removal and Installation

INFOID:0000000003795855

REMOVAL

1. Remove evaporator pipe assembly. Refer to HA-54, "Exploded View".
2. Slide evaporator (1) toward the right side of the vehicle (as shown in the figure), and then remove intake sensor (2) from evaporator.
3. Remove evaporator.

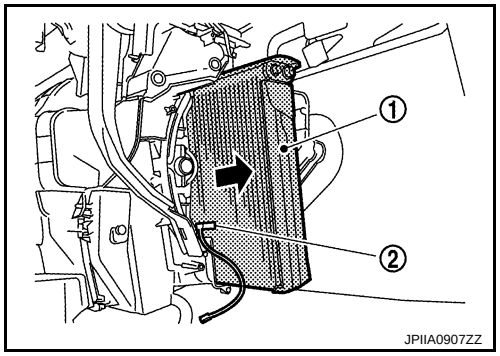

INSTALLATION

Installation is basically the reverse order of removal.

CAUTION:

- **Replace O-rings with new ones. Then apply compressor oil to them when installing.**
- **Mark the mounting position of intake sensor bracket prior to removal so that the reinstalled sensor can be located in the same position.**
- **Do not rotate the bracket insertion part when removing and installing the intake sensor.**
- **Check for refrigerant leakage when charging refrigerant.**

EVAPORATOR PIPE ASSEMBLY

Exploded View

INFOID:0000000003825219

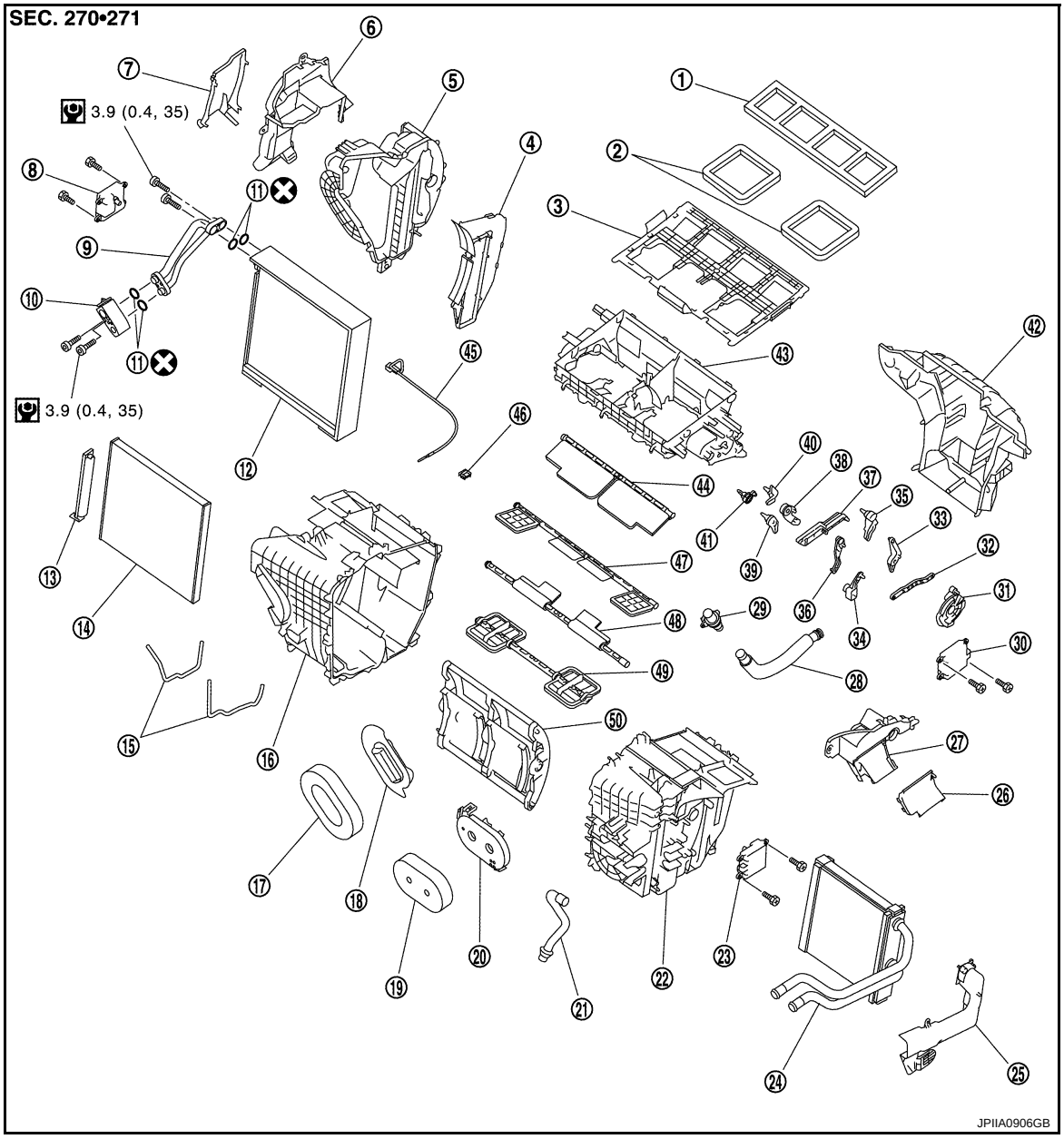

1.	Ventilator seal	2.	Defroster seal	3.	Distributor upper case
4.	Center case	5.	Heater & cooling unit case cover	6.	Foot duct 1 (right)
7.	Foot duct 2 (right)	8.	Air mix door motor (passenger side)	9.	Evaporator pipe assembly
10.	Expansion valve	11.	O-ring	12.	Evaporator
13.	Filter cover	14.	Air conditioner filter	15.	Case packing
16.	Heater & cooling unit case (right)	17.	Cooler pipe grommet	18.	Grommet
19.	Heater pipe grommet	20.	Heater pipe support	21.	Drain hose
22.	Heater & cooling unit case (left)	23.	Air mix door motor (driver side)	24.	Heater core
25.	Heater pipe cover	26.	Foot duct 2 (left)	27.	Foot duct 1 (left)
28.	Aspirator hose	29.	Aspirator	30.	Mode door motor
31.	Main link	32.	Rod link	33.	Ventilator door link
34.	Mode door lever	35.	Ventilator door lever	36.	Max. cool door link

37. Defroster door link
38. Foot door link
39. Max. cool door lever
40. Foot door lever
41. Defroster door lever
42. Adapter case
43. Distributor lower case
44. Ventilator door
45. Intake sensor
46. Intake sensor bracket
47. Foot door
48. Max. cool door
49. Defroster door
50. Air mix door (Slide door)

Refer to GI-4, "Components" for symbols in the figure.

Removal and Installation

INFOID:0000000003795853

REMOVAL

1. Disconnect the battery cable from the negative terminal after setting the temperature (passenger side) to 18°C (60°F).
2. Use refrigerant collecting equipment (for HFC-134a) to discharge the refrigerant.
3. Remove mounting bolt (A), and then disconnect low-pressure pipe (1) and high-pressure pipe (2) from expansion valve.
   CAUTION:
   Cap or wrap the joint of the A/C piping and expansion valve with suitable material such as vinyl tape to avoid the entry of air.

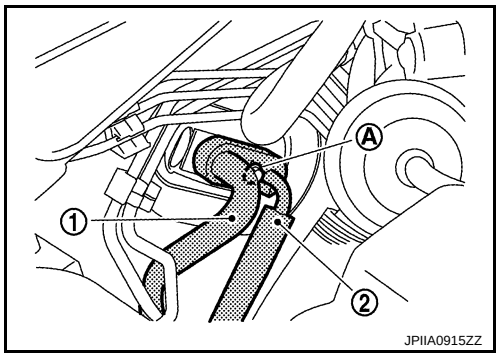

4. Remove blower unit. Refer to the following.
   - VTL-29, "Exploded View" (WITHOUT 7 INCH DISPLAY)
   - VTL-87, "Exploded View" (WITH 7 INCH DISPLAY)
5. Remove foot duct (right). Refer to the following.
   - VTL-59, "FOOT DUCT : Exploded View" (WITHOUT 7 INCH DISPLAY)
   - VTL-117, "FOOT DUCT : Exploded View" (WITH 7 INCH DISPLAY)
6. Disconnect air mix door motor (passenger side) connector.
7. Remove mounting screws (A), and then remove heater & cooling unit case cover (1) with air mix door motor (passenger side) (2) attached.

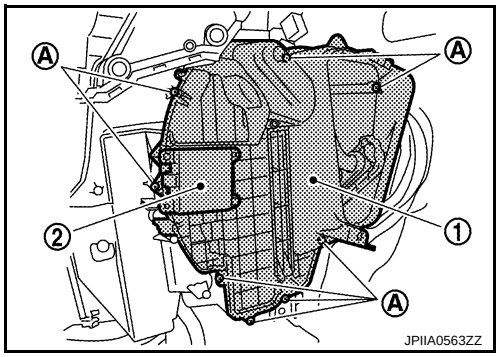

8. Remove mounting bolts (A), and then remove evaporator pipe assembly (1) from evaporator with expansion valve (2) attached.
   CAUTION:
   Cap or wrap the joint of the A/C piping and evaporator with suitable material such as vinyl tape to avoid the entry of air.

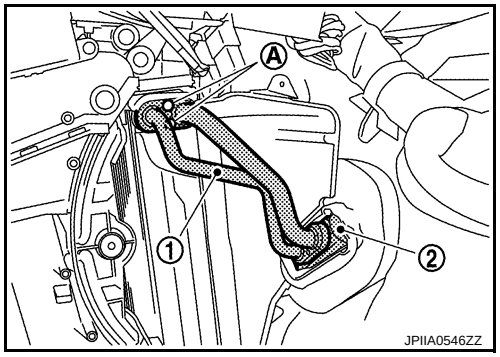

9. Remove mounting bolts (A), and then remove evaporator pipe assembly (1) from expansion valve (2).
   CAUTION:
   Cap or wrap the joint of the A/C piping and expansion valve with suitable material such as vinyl tape to avoid the entry of air.

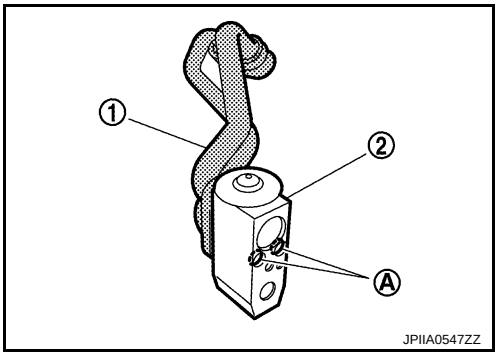

INSTALLATION

Installation is basically the reverse order of removal.

CAUTION:

- **Replace O-rings with new ones. Then apply compressor oil to them when installing.**
- **Check for leakages when recharging refrigerant.**

EXPANSION VALVE

Exploded View

INFOID:0000000003825220

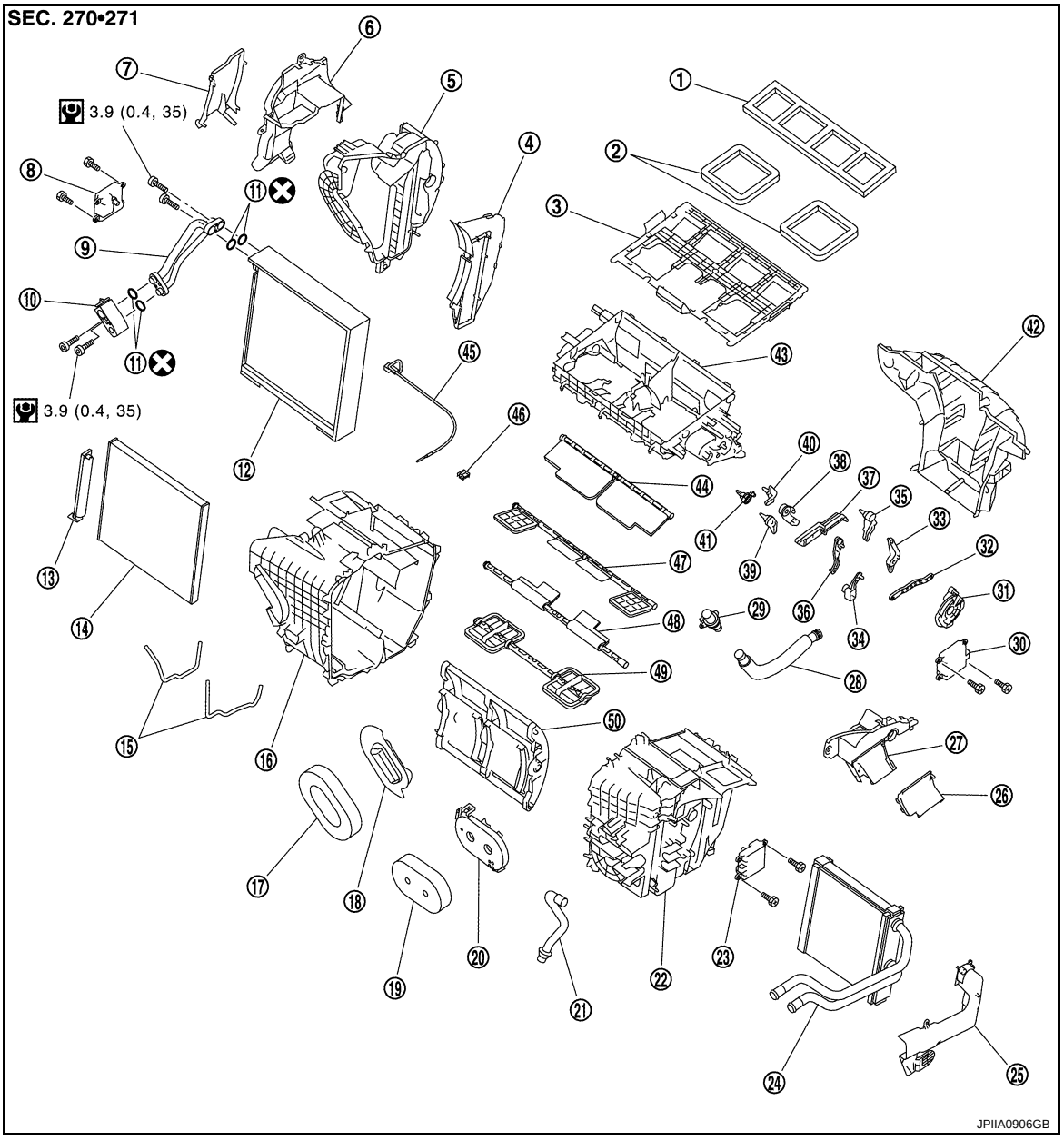

1.	Ventilator seal	2.	Defroster seal	3.	Distributor upper case
4.	Center case	5.	Heater & cooling unit case cover	6.	Foot duct 1 (right)
7.	Foot duct 2 (right)	8.	Air mix door motor (passenger side)	9.	Evaporator pipe assembly
10.	Expansion valve	11.	O-ring	12.	Evaporator
13.	Filter cover	14.	Air conditioner filter	15.	Case packing
16.	Heater & cooling unit case (right)	17.	Cooler pipe grommet	18.	Grommet
19.	Heater pipe grommet	20.	Heater pipe support	21.	Drain hose
22.	Heater & cooling unit case (left)	23.	Air mix door motor (driver side)	24.	Heater core
25.	Heater pipe cover	26.	Foot duct 2 (left)	27.	Foot duct 1 (left)
28.	Aspirator hose	29.	Aspirator	30.	Mode door motor
31.	Main link	32.	Rod link	33.	Ventilator door link
34.	Mode door lever	35.	Ventilator door lever	36.	Max. cool door link

37. Defroster door link
38. Foot door link
39. Max. cool door lever
40. Foot door lever
41. Defroster door lever
42. Adapter case
43. Distributor lower case
44. Ventilator door
45. Intake sensor
46. Intake sensor bracket
47. Foot door
48. Max. cool door
49. Defroster door
50. Air mix door (Slide door)

Refer to GI-4, "Components" for symbols in the figure.

Removal and Installation

INFOID:0000000003795857

REMOVAL

1. Use refrigerant collecting equipment (for HFC-134a) to discharge the refrigerant.
2. Remove mounting bolt (A), and then disconnect low-pressure pipe (1) and high-pressure pipe (2) from expansion valve.
   CAUTION:
   Cap or wrap the joint of the A/C piping and expansion valve with suitable material such as vinyl tape to avoid the entry of air.

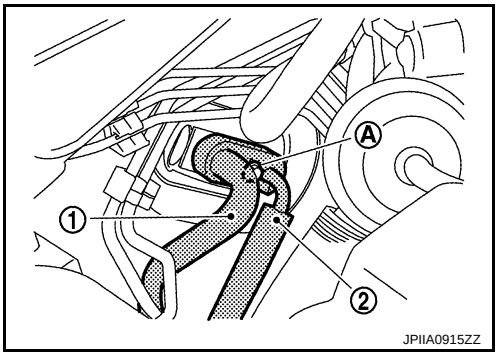

3. Remove mounting bolts (A), and then remove the expansion valve (1).
   CAUTION:
   Cap or wrap the joint of the A/C piping and expansion valve with suitable material such as vinyl tape to avoid the entry of air.

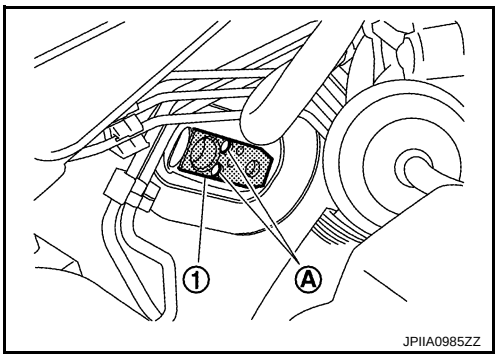

INSTALLATION

Installation is basically the reverse order of removal.

CAUTION:

- **Replace O-rings with new ones. Then apply compressor oil to them when installing.**
- **Check for leakages when recharging refrigerant.**

SERVICE DATA AND SPECIFICATIONS (SDS)

SERVICE DATA AND SPECIFICATIONS (SDS)

Compressor

INFOID:0000000003795858

Model		VALEO THERMAL SYSTEMS JAPAN make DKS-17D
Type		Fixation displacement swash plate
Displacement cm^3 (cu in)/rev	Max.	175 (10.7)
Cylinder bore × stroke (Max.) mm (in.)		30.5 (1.21) × 24 (0.95)
Direction of rotation		Clockwise (viewed from clutch)
Drive belt		Poly V
Disc to pulley clearance mm (in.)	Standard	0.3 - 0.6 (0.012 - 0.024)

Lubricant

INFOID:0000000003795859

Name		NISSAN A/C System Oil Type S (DH-PS)
Capacity m ℓ (US fl oz, Imp fl oz)	Total in system	150 (5.03, 5.3)
	Compressor (service part) charging amount	150 (5.03, 5.3)

Refrigerant

INFOID:0000000003795860

Type	HFC-134a (R-134a)
Capacity kg (lb)	0.55 (1.21)

Engine Idling Speed

INFOID:0000000003795861

Refer to EC-414, "Idle Speed".

Belt Tension

INFOID:0000000003795862

Refer to EM-136, "Drive Belt".